YAMAHA

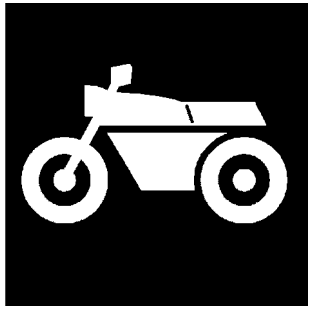

PARTS CATALOGUE
CATALOGO DE REPUESTOS

YZF-R3 (2YP6) ARGENTINA

YAMAHA GENUINE Parts & Accessories

1S2YP-200S1

( )

YZF-R3
CATALOGO DE REPUESTOS
©2016 por Yamaha Motor Co., Ltd.
1ª edición, febrero 2016
Todos los derechos reservados.
Toda reproducción o uso no autorizado
sin el consentimiento escrito de
Yamaha Motor Co., Ltd.
quedan expresamente prohibidos
Impreso en Japón.

YZF-R3
PARTS CATALOGUE
©2016 by Yamaha Motor Co., Ltd.
1st edition, February 2016
All rights reserved.
Any reprinting or unauthorized use
without the written permission of
Yamaha Motor Co., Ltd.
is expressly prohibited.
Printed in Japan.

PROLOGO

Este catálogo de repuestos corresponde a las piezas para el o los modelos que figuran en la página de portada. Al formular el pedido de repuestos, se ruega citar este catálogo y especificar correctamente el número y el nombre de las piezas.

1. Las modificaciones y agregados que se hayan realizado después de la edición de este Catálogo de Repuestos, serán anunciados en las Informaciones de Recambios.
   Es recomendable que se hagan las correcciones necesarias en el Catálogo de Repuestos de acuerdo con las Informaciones de Recambios.

2. Abreviaciones
   En este. Catálogo de Repuestos se emplean las siguientes abreviaciones.

   “UR” Usar el número de partes especificado

   “UN” Usar la cantidad necesaria

   “AP” Piezas sustitutivas

   “LM” Fabricación local (Hay que pedir los repuestos en las cercanías)

   “F#” Nº de bastidor (Nº aplicable a la máquina)

   “O/S” Sobredimensionado

3. La cantidad de componentes para el montaje
   - Los componentes, suministrados como conjunto, se describen con un punto (.) que precede al nombre del parte como se indica a continuación.
   - La numeración que aparece a la derecha de cada descripción indica la cantidad de partes por cada unidad de conjunto.

CODIGO Nº	DESCRIPCION	CANT.	OBSERVACIONES
2F5–83310–60	ENSAMBLAJE DE LA LUZ	2	
115–83311–60	.BOMBILLA (6V–18W)	1	

4. Los colores de los componentes se indican como sigue en la columna de “OBSERVACIONES”.

CODIGO Nº	DESCRIPCION	CANT.	OBSERVACIONES
2N4–24110–00–X5	COMP. DEL TANQUE	2	MXR
3J1–24240–10	.GRAFICO, DEL TANQUE	1	PARA MXR

5. Debe tenerse en cuenta que las ilustraciones sirven como guia para la búsqueda de los números de partes y no deben usarse para el montaje. Durante el montaje, se recomienda usar el manual de taller correspondiente.

6. EL asterisco (*) antes del número de referencia indica los elementos modificados después de la primera edición.

FOREWORD

This Parts Catalogue is related to the parts for the model(s) on the cover page. When you are ordering replacement parts, please refer to this Parts Catalogue and quote both part numbers and part names correctly.

1. Modifications or additions which have been made after the issue of the Parts Catalogue will be announced in the Parts News.
   It is advisable that you make the necessary corrections to the Parts Catalogue according to the Parts News.

2. Abbreviations
   The following abbreviations are used in this Parts Catalogue.

   "UR" Use specified parts number.

   "UN" Use as many as needed.

   "AP" Alternate Parts

   "LM" Locally Made (Parts need to be ordered locally)

   "F#" Frame No. (Applicable machine No.)

   "O/S" Over Size

3. The number of components for assembly
   - Parts, which are to be supplied in an assembly, are listed with a dot (.) in front of the part name as shown below.
   - The numeral appearing to the right of each component part indicates the quantity of parts for each assembly unit.

PART NO.	DESCRIPTION	Q'TY	REMARKS
2F5–83310–60	FRONT FLASHER LIGHT ASSY	2	
115–83311–60	.BULB (6V–18W)	1	

4. Applicable colours of graphics are represented in the "REMARKS" as shown below.

PART NO.	DESCRIPTION	Q'TY	REMARKS
2N4–24110–00–X5	FUEL TANK COMP.	2	MXR
3J1–24240–10	.GRAPHIC, FUEL TANK	1	FOR MXR

5. Note that the illustrations for reference in finding parts numbers are not to be used for assembling. When assembling, please use the applicable service manual.

6. The asterisk (*) before a reference number indicates modified items after the first edition.

7. Números de serie

Nº de Serie del bastidor

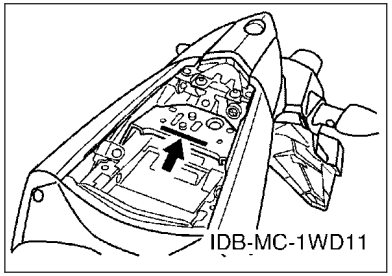

Nº de Serie del motor

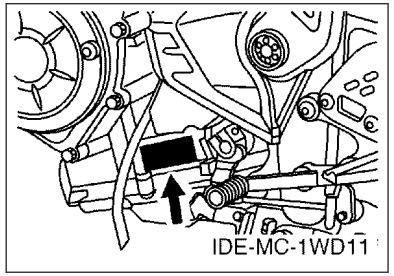

8. Códigos de color aplicables (El símbolo (*) muestra el color de modelo.)

Abreviatura	Nombre de color	Código de color
DPBM15	DEEP PURPLISH BLUE METALLIC 15	1329
DPBMC(*)	DEEP PURPLISH BLUE METALLIC C	0564
LGB	LOW GLOSS BLACK	0098
MBL2	MAT BLACK 2	0582
MNM3(*)	MAT GRAY METALLIC 3	1278
MS1	MAT SILVER 1	1160
SMX	BLACK METALLIC X	0903
VRC1	VIVID RED COCKTAIL 1	0121
WM6(*)	BLANCO METALICO 6	1124
WM6(*)	WHITE METALLIC 6	1124

9. Nº de serie inicial aplicable

Nº de Serie del bastidor

Nº de serie	Nombre de la columna de cantidades	Código de Modelo

Nº de Serie del motor

Nº de serie	Nombre de la columna de cantidades	Código de Modelo

7. Applicable Serial No.

Frame Serial No.

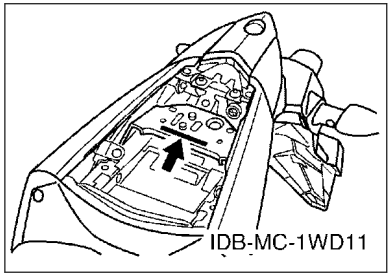

Engine Serial No.

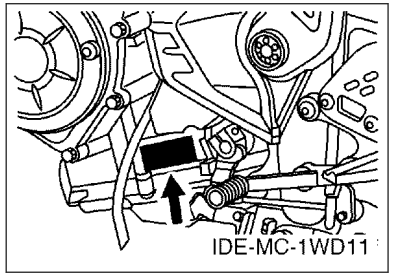

8. Applicable Colour Code (The (*) mark shows Model colour.)

Abbreviation	Colour Name	Colour Code
DPBM15	DEEP PURPLISH BLUE METALLIC 15	1329
DPBMC(*)	DEEP PURPLISH BLUE METALLIC C	0564
LGB	LOW GLOSS BLACK	0098
MBL2	MAT BLACK 2	0582
MNM3(*)	MAT GRAY METALLIC 3	1278
MS1	MAT SILVER 1	1160
SMX	BLACK METALLIC X	0903
VRC1	VIVID RED COCKTAIL 1	0121
WM6(*)	BLANCO METALICO 6	1124
WM6(*)	WHITE METALLIC 6	1124

9. Applicable Starting Serial No.

Frame Serial No.

Serial No.	Name Of Q’ty Column	Model Code

Engine Serial No.

Serial No.	Name Of Q’ty Column	Model Code

CONTENIDO

MOTOR

CULATA DE CILINDRO..... 1
CIGUENAL & PISTON.....3
VALVULA.....5
ARBOL DE LEVAS & CADENA.....6
BOMBA DE AGUA.....7
RADIADOR & MANGUERA.....8
BOMBA DE ACEITE.....9
ADMISION.....10
DESCARGA.....12
CARTER.....14
CUBIERTA DE CARTER 1.....15
EMBRAGUE DEL ARRANQUE.....16
EMBRAGUE.....17
TRANSMISION.....18
LEVA DE CAMBIO & HORQUILLA.....20
EJE DE CAMBIO & PEDAL.....21

SHASIS

CUADRO.....22
GUARDABARRO.....24
CUBIERTA LATERAL.....26
BRAZO TRASERO & SUSPENSION.....28
DIRECCION.....29
HORQUILLA DELANTERA.....30
DEPOSITO DE COMBUSTIBLE.....32
ASIENTO.....35
RUEDA DELANTERA.....36
CALIBRE FRENO DELANTERA.....37
RUEDA TRASERA.....38
CALIBRE FRENO TRASERA.....40
MANILLAR & CABLE.....41
CILINDRO MAESTRO DELANTERO.....42
SOPORTE & APOYAPIE.....43
CILINDRO MAESTRO TRASERO.....45
PARABRISAS.....46
BOVEDA 1.....48
GENERADOR.....51
MOTOR DE ARRANQUE.....52
LUZ DE DESTELLADOR.....53
MEDIDOR.....54
FARO DELANTERO.....55
LUZ DE COLA.....56
INTERRUPTOR DE MANILLAR&PALANC.....57
EQUIPO ELECTRICO 1.....58
EQUIPO ELECTRICO 2.....60

INDICE

INDICE NUMERICO.....62

CONTENTS

ENGINE

CYLINDER HEAD....1
CRANKSHAFT & PISTON....3
VALVE....5
CAMSHAFT & CHAIN....6
WATER PUMP....7
RADIATOR & HOSE....8
OIL PUMP....9
INTAKE....10
EXHAUST....12
CRANKCASE....14
CRANKCASE COVER 1....15
STARTER CLUTCH....16
CLUTCH....17
TRANSMISSION....18
SHIFT CAM & FORK....20
SHIFT SHAFT....21

CHASSIS

FRAME....22
FENDER....24
SIDE COVER....26
REAR ARM & SUSPENSION....28
STEERING....29
FRONT FORK....30
FUEL TANK....32
SEAT....35
FRONT WHEEL....36
FRONT BRAKE CALIPER....37
REAR WHEEL....38
REAR BRAKE CALIPER....40
STEERING HANDLE & CABLE....41
FRONT MASTER CYLINDER....42
STAND & FOOTREST....43
REAR MASTER CYLINDER....45
WINDSHIELD....46
COWLING 1....48
GENERATOR....51
STARTING MOTOR....52
FLASHER LIGHT....53
METER....54
HEADLIGHT....55
TAILLIGHT....56
HANDLE SWITCH & LEVER....57
ELECTRICAL 1....58
ELECTRICAL 2....60

INDEX

NUMERICAL INDEX....62

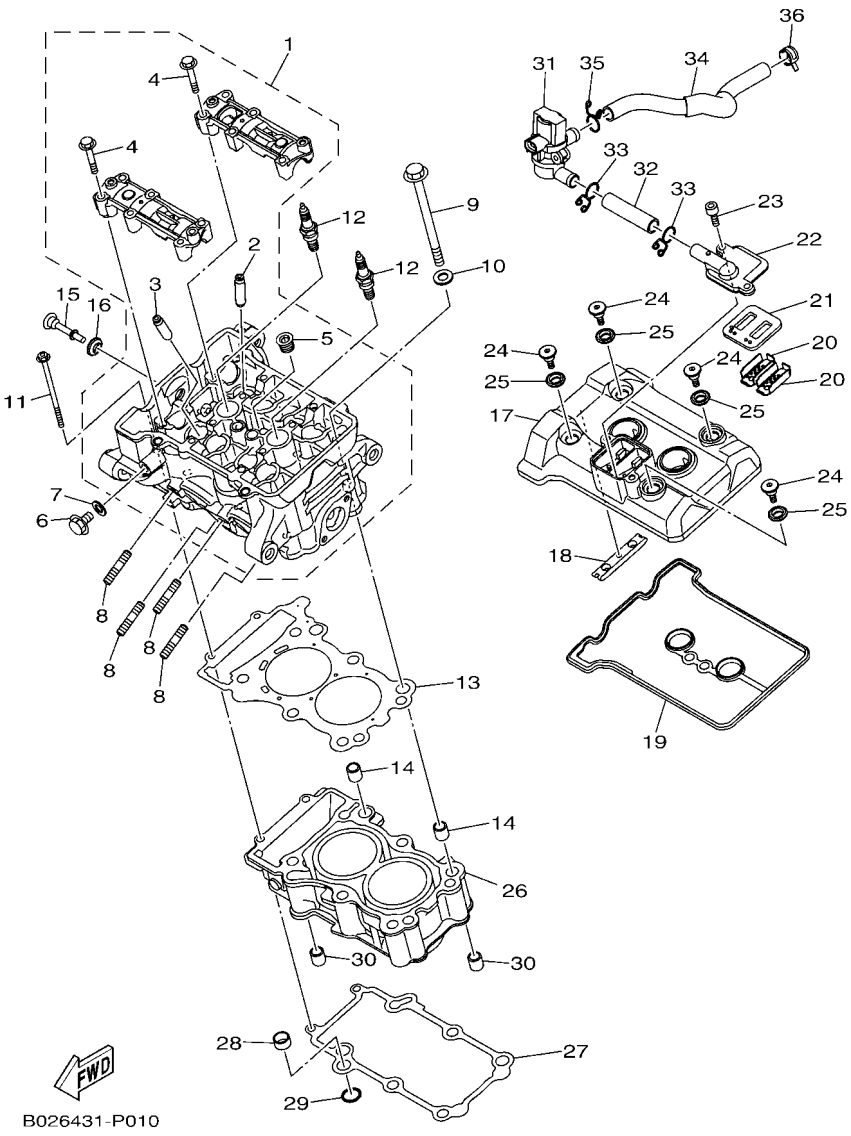

FIG. 1 CULATA DE CILINDRO — CYLINDER HEAD

REF. Nº	CODIGO Nº PART NO.	DESCRIPCION DESCRIPTION	2YP6					OBSERVACIONES REMARKS
1	2MS–E1102–00	CULATA DE CILINDRO COMPLETA CYLINDER HEAD ASSY	1					
2	2MS–E1133–10	.GUIA DE VALVULA 1 .GUIDE, VALVE 1	4					
3	1WD–E1133–10	.GUIA DE VALVULA 1 .GUIDE, VALVE 1	4					
4	90105–06027	.TORNILLO .BOLT, FLANGE	12					
5	90340–18002	.TORNILLO, DE DRENAJE .PLUG, STRAIGHT SCREW	1					
6	95022–08012	PERNO, DE BRIDA BOLT, FLANGE	1					
7	90430–08119	JUNTA GASKET	1					
8	95612–08625	PERNO DE PUNTAL BOLT, STUD	4					
9	2MS–11361–00	PERNO RETEN DE CILINDRO 1 BOLT, CYLINDER HOLDING 1	6					
10	90201–10845	ARANDELA PLANA WASHER, PLATE	6					
11	90110–06870	TORNILLO ALLEN BOLT, HEXAGON SOCKET HEAD	2					
12	94700–00872	BUJIA (NGK CR8E) PLUG, SPARK (NGK CR8E)	2					
13	2MS–E1181–00	JUNTA, DE CULATA 1 GASKET, CYLINDER HEAD 1	1					
14	99530–14016	PASADOR, DE ESPIGA PIN, DOWEL	2					
15	90109–06898	PERNO BOLT	1					
16	1WD–E111G–00	CASQUILLO DE GOMA RUBBER, MOUNT 1	1					
17	1WD–E1191–00	TAPA CULATA DE CILINDRO 1 COVER, CYLINDER HEAD 1	1					
18	1WD–E2241–00	TOPE DE GUIA 2 GUIDE, STOPPER 2	1					
19	1WD–E1193–00	EMPAQUE GASKET, HEAD COVER 1	1					
20	5VY–1482K–00	PLACA PLATE	2					
21	1WD–E4890–00	VALVULA DE LENGUETA COMPLETA REED VALVE ASSY	1					
22	1WD–E4899–00	TAPA, DE CAJA CAP, CASE	1					
23	91312–06020	TORNILLO BOLT	2					
24	90109–06899	PERNO BOLT	4					
25	1WD–E111G–00	CASQUILLO DE GOMA RUBBER, MOUNT 1	4					
26	2MS–E1311–00	CILINDRO 1 CYLINDER 1	1					
27	1WD–E1351–00	JUNTA, DE CILINDRO GASKET, CYLINDER	1					

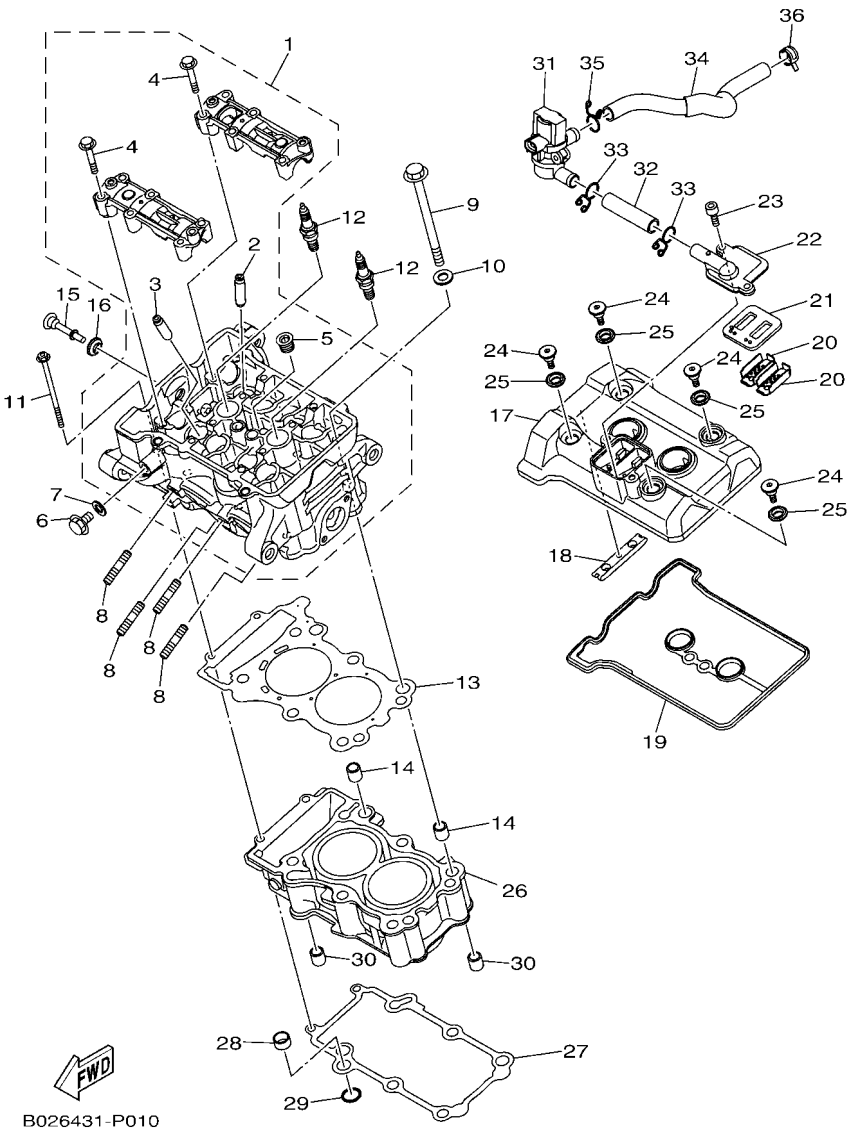

FIG. 1 CULATA DE CILINDRO — CYLINDER HEAD

REF. Nº	CODIGO Nº PART NO.	DESCRIPCION DESCRIPTION	2YP6					OBSERVACIONES REMARKS
28	5NL–12564–00	MANGUERA DE AGUA PIPE, WATER	1					
29	93210–16716	ANILLO O O-RING	1					
30	99530–14016	PASADOR, DE ESPIGA PIN, DOWEL	2					
31	1WD–E4840–00	VALVULA, CORTE DE AIRE AIR CUT VALVE ASSY	1					
32	1WD–E4881–00	TUBO 1 HOSE, BEND 1	1					
33	90467–16801	PRESILLA CLIP	2					
34	1WD–E4882–01	TUBO 2 HOSE, BEND 2	1					
35	90467–16801	PRESILLA CLIP	1					
36	90467–16800	PRESILLA CLIP	1					

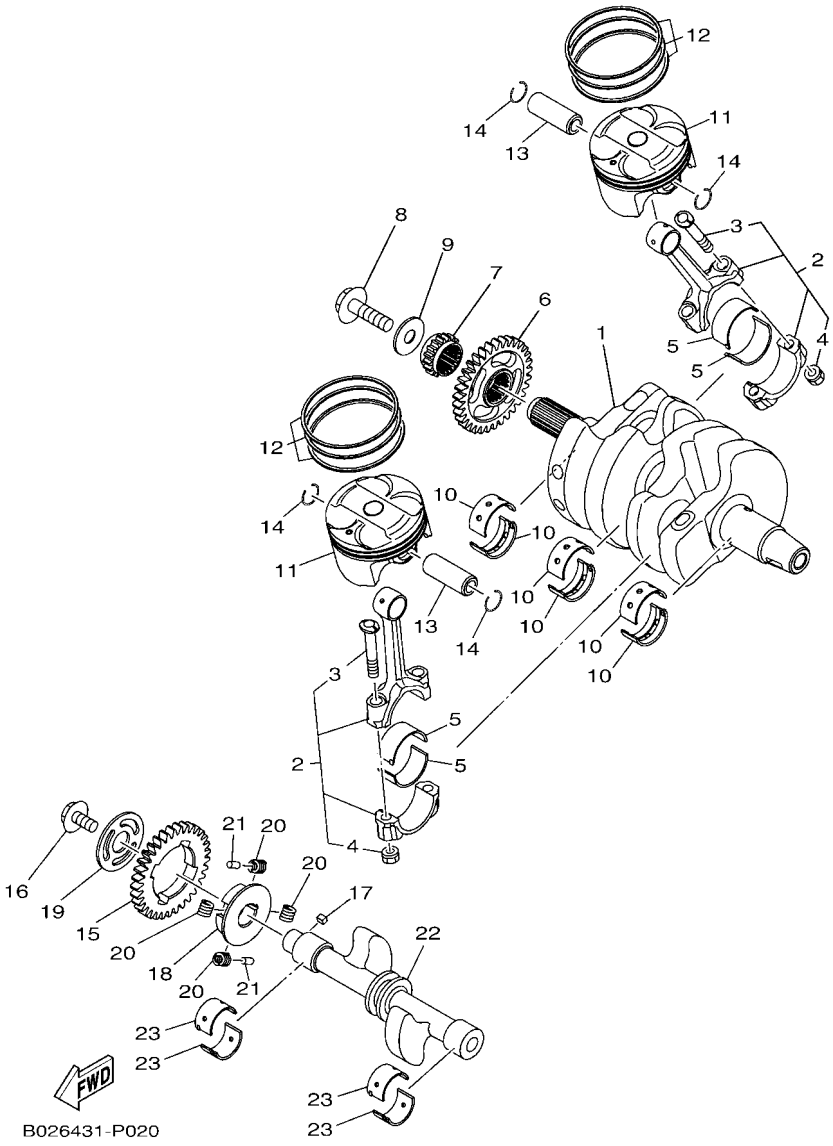

FIG. 2 CIGUENAL & PISTON — CRANKSHAFT & PISTON

REF. Nº	CODIGO Nº PART NO.	DESCRIPCION DESCRIPTION	2YP6					OBSERVACIONES REMARKS
1	1WD–11411–00	CIGUENAL CRANKSHAFT	1					
2	1WD–11650–00	BIELA COMPLETA CONNECTING ROD ASSY	2					
3	5SL–11654–00	.TORNILLO DE BIELA .BOLT, CONNECTING ROD	2					
4	90179–07652	.TUERCA .NUT	2					
5	1WD–11656–00	COJINETE PLANO PLANE BEARING, CONNECTING ROD	4					UR AZUL UR BLUE
	1WD–11656–10	COJINETE PLANO PLANE BEARING, CONNECTING ROD	4					UR NEGRO UR BLACK
	1WD–11656–20	COJINETE PLANO PLANE BEARING, CONNECTING ROD	4					UR MARRON UR BROWN
	1WD–11656–30	COJINETE PLANO PLANE BEARING, CONNECTING ROD	4					UR VERDE UR GREEN
6	1WD–E1536–00	ENGRANAJE TRACCION GEAR, DRIVE	1					
7	1WD–E1549–00	CATALINA CADENA DE LEVA SPROCKET, CAM CHAIN	1					
8	90105–10883	TORNILLO BOLT, FLANGE	1					
9	90201–102R1	ARANDELA PLANA WASHER, PLATE	1					
10	1WD–11416–00	COJINETE PLANO 1 PLANE BEARING, CRANKSHAFT 1	6					UR AZUL UR BLUE
	1WD–11416–10	COJINETE PLANO 1 PLANE BEARING, CRANKSHAFT 1	6					UR NEGRO UR BLACK
	1WD–11416–20	COJINETE PLANO 1 PLANE BEARING, CRANKSHAFT 1	6					UR MARRON UR BROWN
	1WD–11416–30	COJINETE PLANO 1 PLANE BEARING, CRANKSHAFT 1	6					UR VERDE UR GREEN
	1WD–11416–40	COJINETE PLANO 1 PLANE BEARING, CRANKSHAFT 1	6					UR AMARILLO UR YELLOW
11	2MS–E1631–00	PISTON (NORMA) PISTON (STD)	2					
12	2MS–E1603–00	JUEGO DE ANILLOS (NORMA) PISTON RING SET (STD)	2					
13	1WD–E1633–00	PASADOR, PISTON PIN, PISTON	2					
14	93450–16068	SEGURO CIRCLIP	4					
15	1WD–E1531–00	ENGRANAJE CONTRAPESO GEAR, BALANCE WEIGHT	1					
16	90105–088F8	TORNILLO BOLT, FLANGE	1					
17	90282–04036	CHAVETA, RECTA KEY, STRAIGHT	1					
18	1WD–E1496–00	COPA TOPE BOSS, BUFFER	1					
19	90201–16812	ARANDELA PLANA WASHER, PLATE	1					
20	90501–22800	RESORTE DE COMPRESION SPRING, COMPRESSION	4					

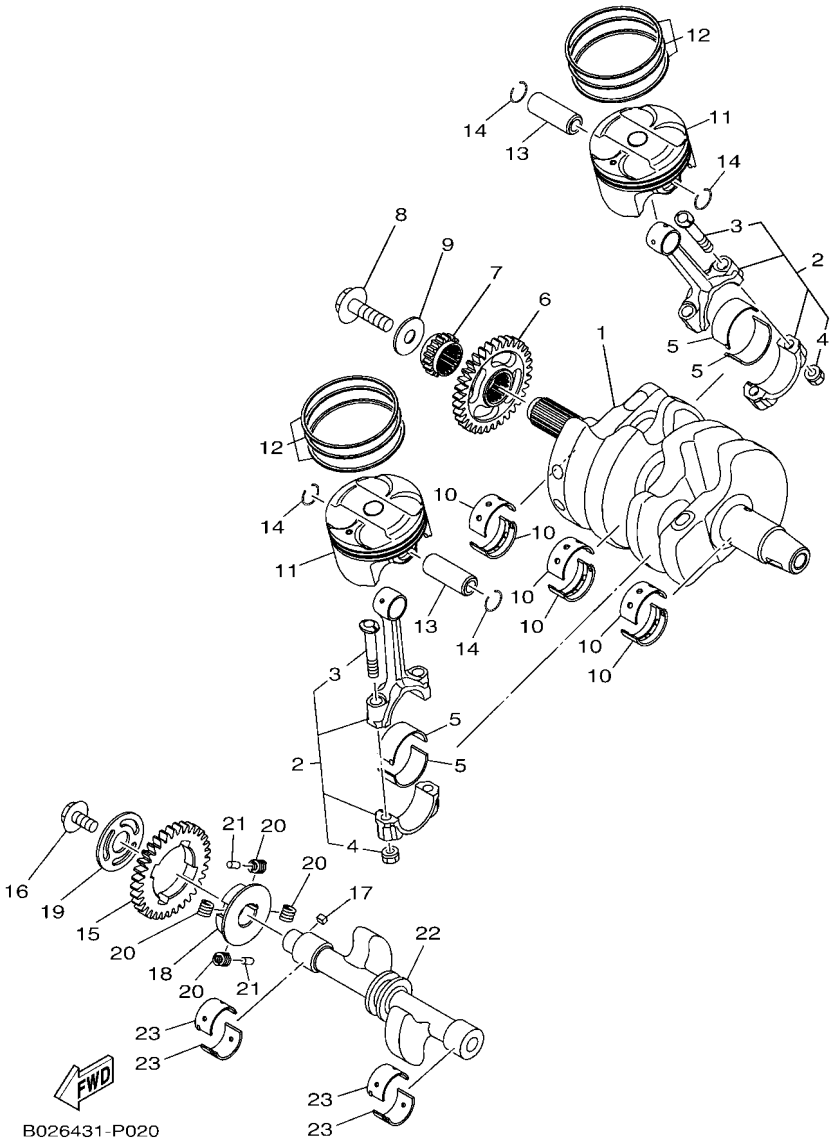

FIG. 2 CIGUENAL & PISTON — CRANKSHAFT & PISTON

REF. Nº	CODIGO Nº PART NO.	DESCRIPCION DESCRIPTION	2YP6					OBSERVACIONES REMARKS
21	93605–10090	PASADOR DE CLAVIJA PIN, DOWEL	2					
22	1WD–E1454–00	PESO 1 WEIGHT 1	1					
23	1WD–11413–00	METAL, CONTRAPESO METAL, BALANCE WEIGHT	4					UR AZUL UR BLUE
	1WD–11413–10	METAL, CONTRAPESO METAL, BALANCE WEIGHT	4					UR NEGRO UR BLACK
	1WD–11413–20	METAL, CONTRAPESO METAL, BALANCE WEIGHT	4					UR MARRON UR BROWN
	1WD–11413–30	METAL, CONTRAPESO METAL, BALANCE WEIGHT	4					UR VERDE UR GREEN
	1WD–11413–40	METAL, CONTRAPESO METAL, BALANCE WEIGHT	4					UR AMARILLO UR YELLOW

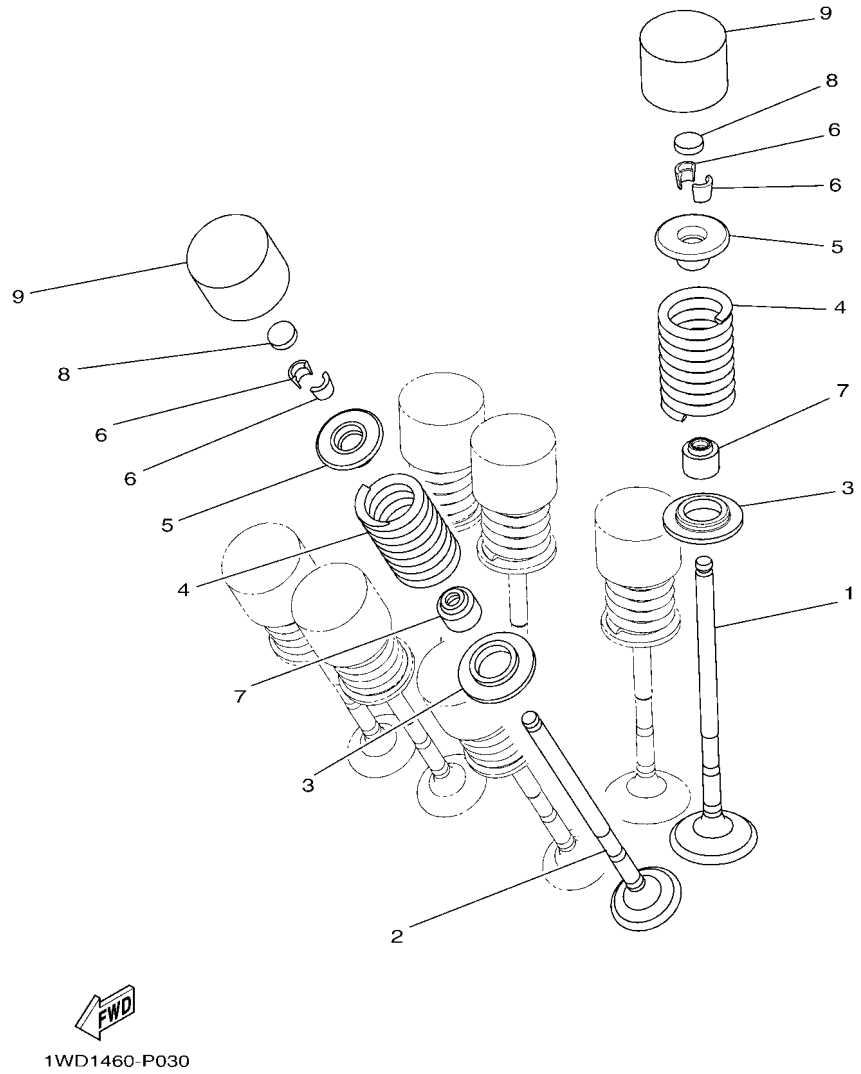

FIG. 3 VALVULA VALVE

REF. Nº	CODIGO Nº PART NO.	DESCRIPCION DESCRIPTION	2YP6					OBSERVACIONES REMARKS
1	2MS–E2111–00	VALVULA DE ADMISION VALVE, INTAKE	4					
2	2MS–E2121–00	VALVULA DE ESCAPE VALVE, EXHAUST	4					
3	2MS–E2126–00	ASIENTO RESORTE DE VALVULA2 SEAT, VALVE SPRING 2	8					
4	2MS–E2113–00	RESORTE VALVULA INTERNA SPRING, VALVE INNER	8					
5	2MS–E2117–00	RETEN RESORTE DE VALVULA RETAINER, VALVE SPRING	8					
6	3S0–E2118–00	SEGURO DE VALVULA LOCK, VALVE SPRING RETAINER	16					
7	1PA–E2119–00	SELLO DE ACEITE VALVULA SEAL, VALVE STEM	8					
8	1HX–12168–F0	COJIN, AJUSTADOR 2 (1.50) PAD, ADJUSTING 2 (1.50)	8					UR UR
	1HX–12168–H1	COJIN, AJUSTADOR 2 (1.55) PAD, ADJUSTING 2 (1.55)	8					UR UR
	1HX–12168–K1	COJIN, AJUSTADOR 2 (1.60) PAD, ADJUSTING 2 (1.60)	8					UR UR
	1HX–12168–M1	COJIN, AJUSTADOR 2 (1.65) PAD, ADJUSTING 2 (1.65)	8					UR UR
	1HX–12168–R1	COJIN, AJUSTADOR 2 (1.70) PAD, ADJUSTING 2 (1.70)	8					UR UR
	1HX–12168–U1	COJIN, AJUSTADOR 2 (1.75) PAD, ADJUSTING 2 (1.75)	8					UR UR
	1HX–12168–W1	COJIN, AJUSTADOR 2 (1.80) PAD, ADJUSTING 2 (1.80)	8					UR UR
	1HX–12168–Y1	COJIN, AJUSTADOR 2 (1.85) PAD, ADJUSTING 2 (1.85)	8					UR UR
	1HX–12169–11	COJIN, AJUSTADOR 2 (1.90) PAD, ADJUSTING 2 (1.90)	8					UR UR
	1HX–12169–31	COJIN, AJUSTADOR 2 (1.95) PAD, ADJUSTING 2 (1.95)	8					UR UR
	1HX–12169–50	COJIN, AJUSTADOR 2 (2.00) PAD, ADJUSTING 2 (2.00)	8					UR UR
	1HX–12169–70	COJIN, AJUSTADOR 2 (2.05) PAD, ADJUSTING 2 (2.05)	8					UR UR
	1HX–12169–90	COJIN, AJUSTADOR 2 (2.10) PAD, ADJUSTING 2 (2.10)	8					UR UR
	1HX–12169–E0	COJIN, AJUSTADOR 2 (2.15) PAD, ADJUSTING 2 (2.15)	8					UR UR
	1HX–12169–G0	COJIN, AJUSTADOR 2 (2.20) PAD, ADJUSTING 2 (2.20)	8					UR UR
	1HX–12169–J0	COJIN, AJUSTADOR 2 (2.25) PAD, ADJUSTING 2 (2.25)	8					UR UR
	1HX–12169–L0	COJIN, AJUSTADOR 2 (2.30) PAD, ADJUSTING 2 (2.30)	8					UR UR
	1HX–12169–N0	COJIN, AJUSTADOR 2 (2.35) PAD, ADJUSTING 2 (2.35)	8					UR UR
	1HX–12169–T0	COJIN, AJUSTADOR 2 (2.40) PAD, ADJUSTING 2 (2.40)	8					UR UR
9	2MS–12153–10	LEVANTADOR DE VALVULA LIFTER, VALVE	8					

FIG. 4 ARBOL DE LEVAS & CADENA — CAMSHAFT & CHAIN

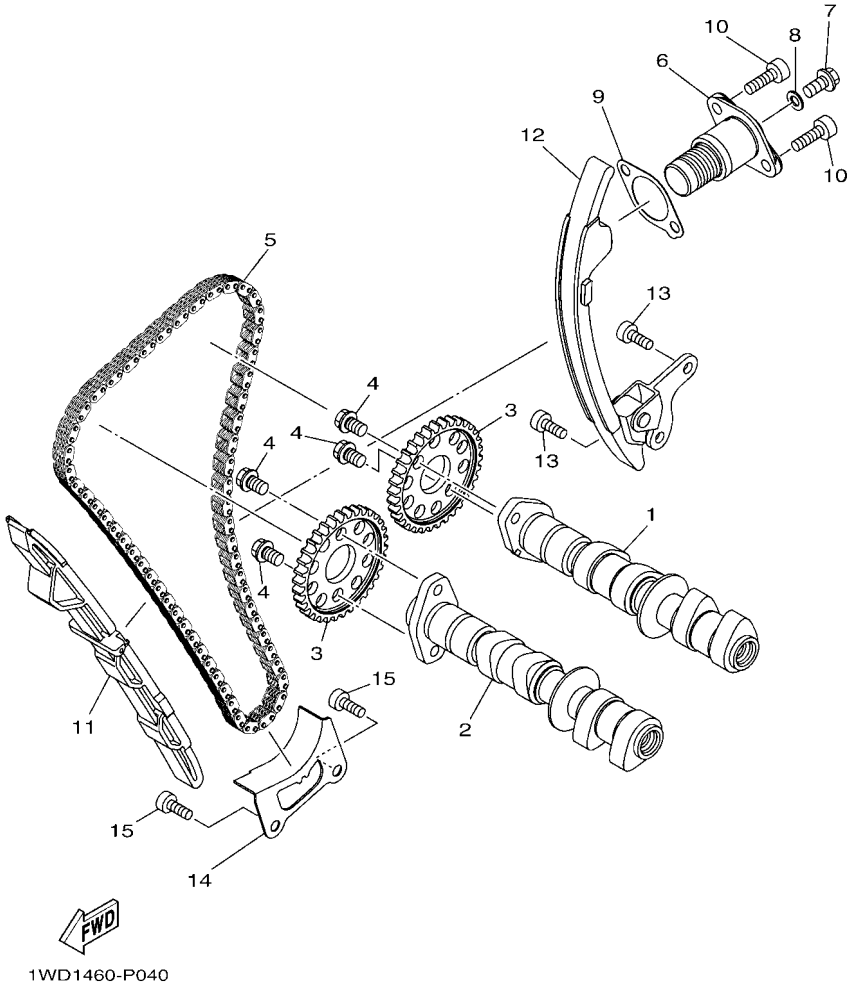

REF. Nº	CODIGO Nº PART NO.	DESCRIPCION DESCRIPTION	2YP6					OBSERVACIONES REMARKS
1	2MS–E2170–01	ARBOL DE LEVAS COMPLETO 1 CAMSHAFT ASSY 1	1					
2	2MS–E2180–01	ARBOL DE LEVAS COMPLETO 2 CAMSHAFT ASSY 2	1					
3	1WD–E2176–00	CATALINA DE CADENA SPROCKET, CAM CHAIN	2					
4	90105–07800	TORNILLO BOLT, FLANGE	4					
5	94591–61118	CADENA CHAIN	1					
6	2MS–12210–00	TENSOR CADENA DE LEVA TENSIONER ASSY, CAM CHAIN	1					
7	95022–06008	PERNO, DE BRIDA BOLT, FLANGE	1					
8	90430–06014	JUNTA GASKET	1					
9	1WD–E2213–00	EMPAQUE DE CAJA TENSOR GASKET, TENSIONER CASE	1					
10	91312–06020	TORNILLO BOLT	2					
11	1WD–E2251–00	AMORTIGUADOR CADENA 1 DAMPER, CHAIN 1	1					
12	2MS–E2252–00	AMORTIGUADOR CADENA 2 DAMPER, CHAIN 2	1					
13	90110–06161	TORNILLO ALLEN BOLT, HEXAGON SOCKET HEAD	2					
14	1WD–E2256–00	CUBIERTA DE CADENA COVER, CHAIN	1					
15	90110–06161	TORNILLO ALLEN BOLT, HEXAGON SOCKET HEAD	2					

FIG. 5 BOMBA DE AGUA — WATER PUMP

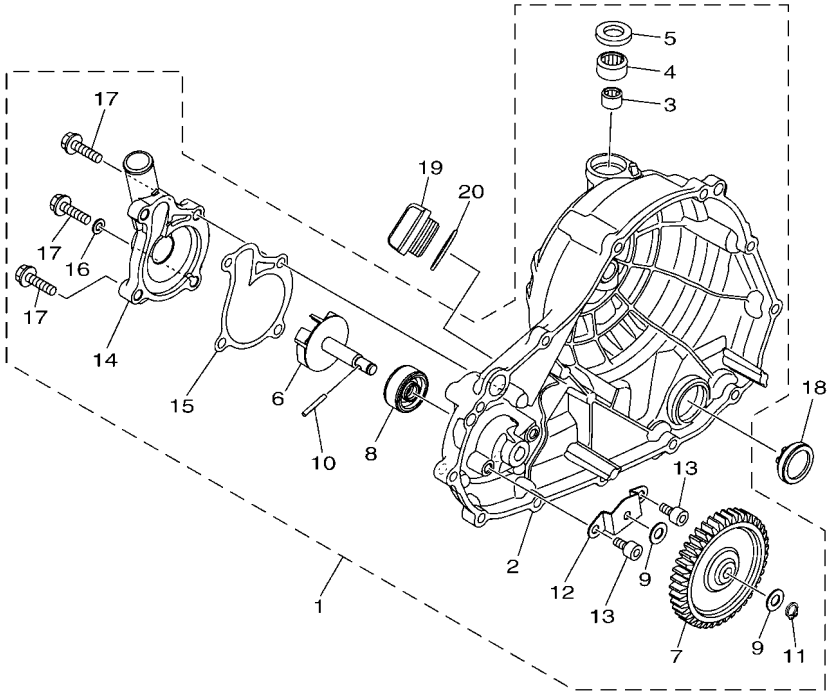

1WD1460-P050

REF. Nº	CODIGO Nº PART NO.	DESCRIPCION DESCRIPTION	2YP6					OBSERVACIONES REMARKS
1	1WD–E2420–00	BOMBA DE AGUA COMPLETA WATER PUMP ASSY	1					
2	1WD–E5421–00	.TAPA DE CARTER DERECHA .COVER, CRANKCASE 2	1					
3	93317–11096	.COJINETE .BEARING	1					
4	93315–21570	.COJINETE DE RODILLOS .BEARING	1					
5	93102–15801	.SELLO ACEITE .OIL SEAL	1					
6	1WD–E2450–00	.EJE IMPULSOR COMPLETO .IMPELLER SHAFT ASSY	1					
7	1WD–E2453–00	.ENGRANAJE .GEAR	1					
8	33S–E2223–00	.SELLO .SEAL	1					
9	33S–E2456–00	.ARANDELA .WASHER	2					
10	1WD–E319L–00	.PASADOR CILINDRICO .PIN, STRAIGHT	1					
11	99009–08400	.PRESILLA REDONDA .CIRCLIP	1					
12	1WD–E2681–00	.EMPAQUETADURA .PLATE	1					
13	91312–06010	.TORNILLO .BOLT	2					
14	1WD–E2422–00	.CUBIERTA DE CAJA .COVER, HOUSING	1					
15	1WD–E2428–00	.JUNTA, DE CBTA.CAJA 2 .GASKET, HOUSING COVER 2	1					
16	90430–06014	.JUNTA .GASKET	1					
17	95022–06025	.PERNO, DE BRIDA .BOLT, FLANGE	3					
18	2H7–15361–00	MEDIDOR DE NIVEL GAUGE, LEVEL	1					
19	1WD–E5362–00	TAPON DEL NIVEL DE ACEITE PLUG, OIL LEVEL	1					
20	93210–27807	ANILLO O O-RING	1					

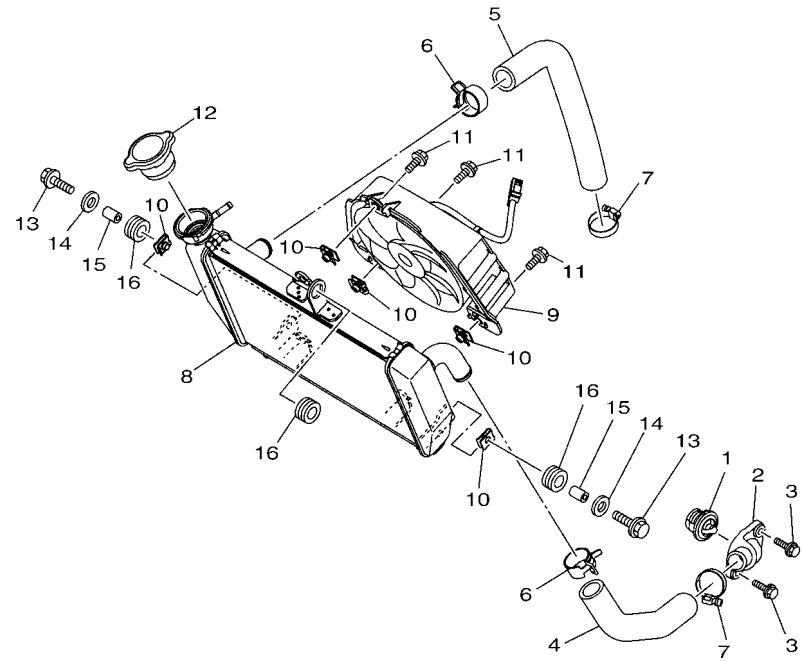

1WD1460-P060

FIG. 6 RADIADOR & MANGUERA — RADIATOR & HOSE

REF. Nº	CODIGO Nº PART NO.	DESCRIPCION DESCRIPTION	2YP6					OBSERVACIONES REMARKS
1	5P0–12411–00	TERMOSTAT THERMOSTAT	1					
2	1WD–E2413–00	CUBIERTA TERMOSTATO COVER, THERMOSTAT	1					
3	95022–06020	PERNO, DE BRIDA BOLT, FLANGE	2					
4	2MS–E2577–00	MANGUERA 2 HOSE 2	1					
5	1WD–E2578–00	MANGUERA 3 HOSE 3	1					
6	90467–250A1	PRESILLA CLIP	2					
7	90450–28001	BRIDA, MANGUERA HOSE CLAMP ASSY	2					
8	1WD–E2461–00	RADIADOR COMPLETO RADIATOR COMP	1					
9	2MS–E2405–00	COMPRESOR BLOWER ASSY	1					
10	1WD–E2671–00	TUERCA 1 NUT 1	5					
11	5YP–E2675–00	PERNO, SUJECION VENTILADOR BOLT, BLOWER HOLDING	3					
12	5ST–E2462–00	TAPON, DEL RADIADOR CAP, RADIATOR	1					
13	95827–06025	TORNILLO BOLT, FLANGE	2					
14	90201–06072	ARANDELA PLANA WASHER, PLATE	2					
15	90387–064W3	ESPACIADOR COLLAR	2					
16	90480–15808	TAPON GROMMET	3					

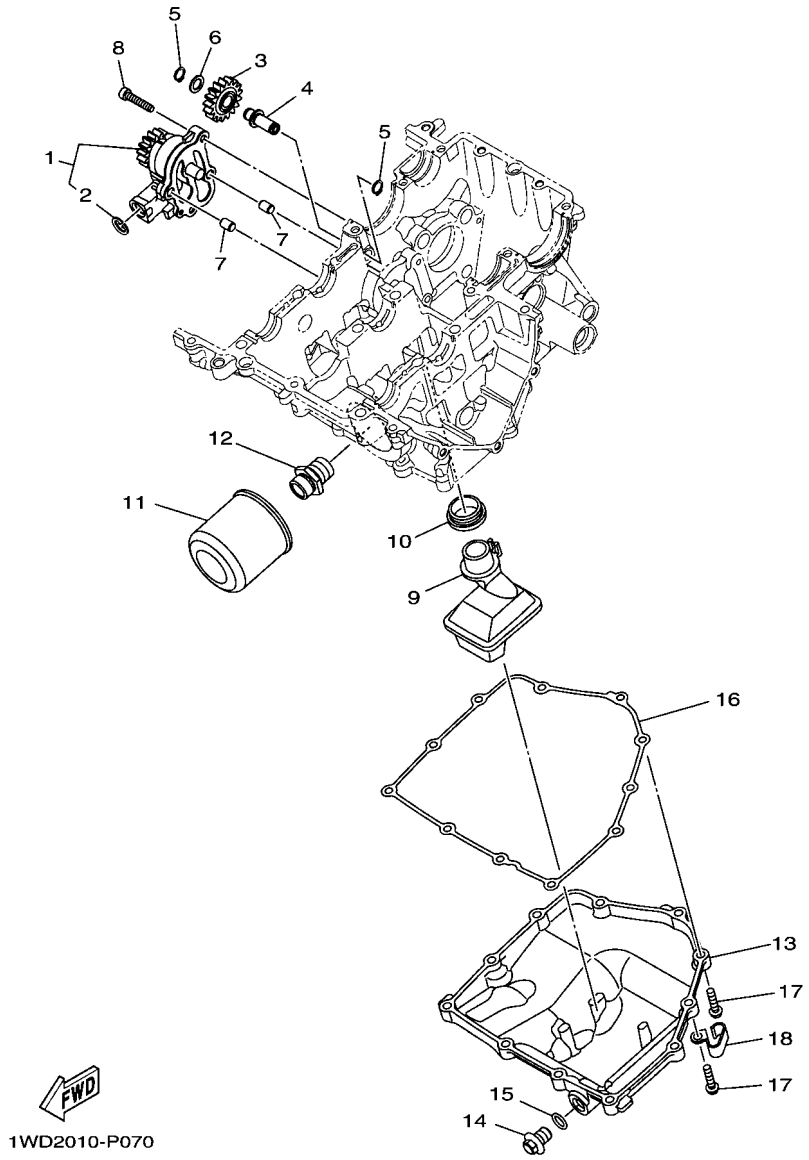

FIG. 7 BOMBA DE ACEITE — OIL PUMP

REF. Nº	CODIGO Nº PART NO.	DESCRIPCION DESCRIPTION	2YP6					OBSERVACIONES REMARKS
1	1WD–E3300–00	BOMBA DE ACEITE COMPLETA OIL PUMP ASSY	1					
2	99009–15500	.PRESILLA REDONDA .CIRCLIP	1					
3	1WD–E3341–00	ENGRENAJE NEUTRO DE BOMBA GEAR, OIL PUMP IDLE	1					
4	1WD–E3342–00	EJE DE ENGRENAJE NEUTRO SHAFT, IDLE GEAR	1					
5	99009–10400	PRESILLA REDONDA CIRCLIP	2					
6	90201–10119	ARANDELA PLANA WASHER, PLATE	1					
7	99530–08012	PASADOR, DE ESPIGA PIN, DOWEL	2					
8	91312–06030	TORNILLO BOLT	4					
9	1WD–E3410–00	CAJA DE FILTRO COMPLETA STRAINER HOUSING ASSY	1					
10	1WD–E3415–00	SELLO COLADOR ACEITE SEAL, OIL STRAINER	1					
11	1WD–E3440–00	ELEMENTO FILTRO DE ACEITE ELEMENT ASSY, OIL CLEANER	1					
12	90401–20008	PERNO DE UNION BOLT, UNION	1					
13	1WD–E3417–00	TAPA DE FILTRO COVER, STRAINER	1					
14	90340–12808	TORNILLO, DE DRENAJE PLUG, STRAIGHT SCREW	1					
15	4YS–E1198–00	EMPAQUE GASKET	1					
16	1WD–E3414–00	EMPAQUE DE TAPA FILTRO GASKET, STRAINER COVER	1					
17	95022–06025	PERNO, DE BRIDA BOLT, FLANGE	11					
18	90462–08810	BRIDA CLAMP	1					

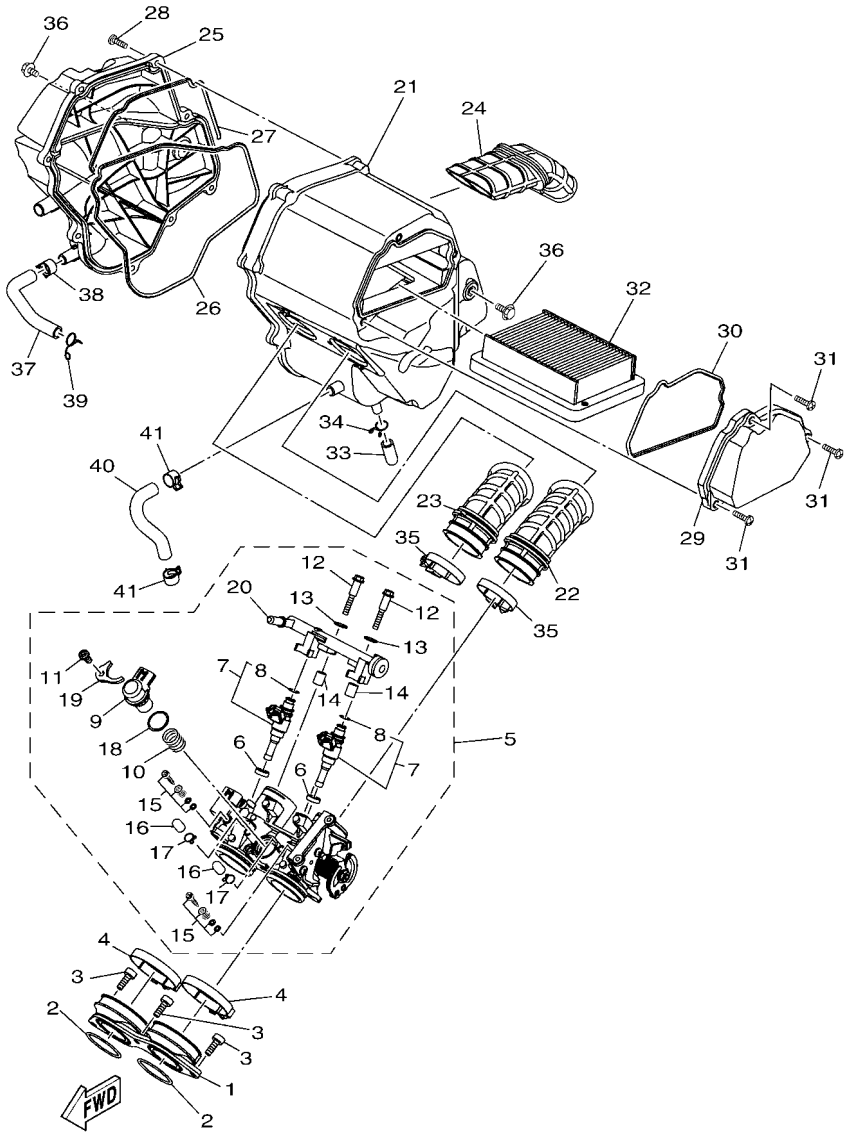

FIG. 8 ADMISION — INTAKE

REF. Nº	CODIGO Nº PART NO.	DESCRIPCION DESCRIPTION	2YP6					OBSERVACIONES REMARKS
1	2MS–E3586–00	TOBERA DE CARBURADOR 1 JOINT, CARBURETOR 1	1					
2	93210–39802	ANILLO O O-RING	2					
3	91312–06016	TORNILLO BOLT	3					
4	90450–55804	BRIDA, MANGUERA HOSE CLAMP ASSY	2					
5	2MS–E3750–10	CAJA DE ACELERADOR COMPL. THROTTLE BODY ASSY	1					
6	1WD–E3556–00	.EMPAQUE .GASKET	2					
7	1WD–E3761–00	.INYECTOR .INJECTOR	2					
8	5PS–14147–00	..ANILLO O ..O-RING	1					
9	1WS–85801–00	.MOTOR .STEPPING MOTOR	1					
10	1WS–14335–00	.RESORTE DE EMBOLO .SPRING, PLUNGER	1					
11	98502–06012	.TORNILLO .SCREW, PAN HEAD	1					
12	1WD–E3573–00	.PERNO 1 .BOLT 1	2					
13	8GL–13571–00	.ARANDELA .WASHER	2					
14	8HG–14534–00	.COLLAR .COLLAR	2					
15	5JW–14104–00	.CJTO. TORNNILLO DE AIRE .AIR SCREW SET	2					
16	895–14169–00	.FUNDA .CAP	2					
17	8A7–14139–00	.PRESILLA TUBO .CLIP, PIPE	2					
18	54P–E416A–00	.ANILLO O .O-RING	1					
19	1WD–E4243–00	.PLACA .PLATE	1					
20	1WD–E3938–00	.TUBO DE ADMISION .PIPE	1					
21	1WD–E4411–00	CAJA FILTRO DEL AIRE 1 CASE, AIR CLEANER 1	1					
22	2MS–E4469–00	EMBUDO PARA AIRE FUNNEL, AIR	1					
23	2MS–E446C–00	EMBUDO 2 FUNNEL 2	1					
24	1WD–E4437–00	CONDUCTO DUCT	1					
25	2MS–E4412–00	TAPA CAJA DEL FILTRO 1 CAP, CLEANER CASE 1	1					
26	1WD–E4452–00	SELLO SEAL	1					
27	1WD–E4457–00	SELLO SEAL	1					

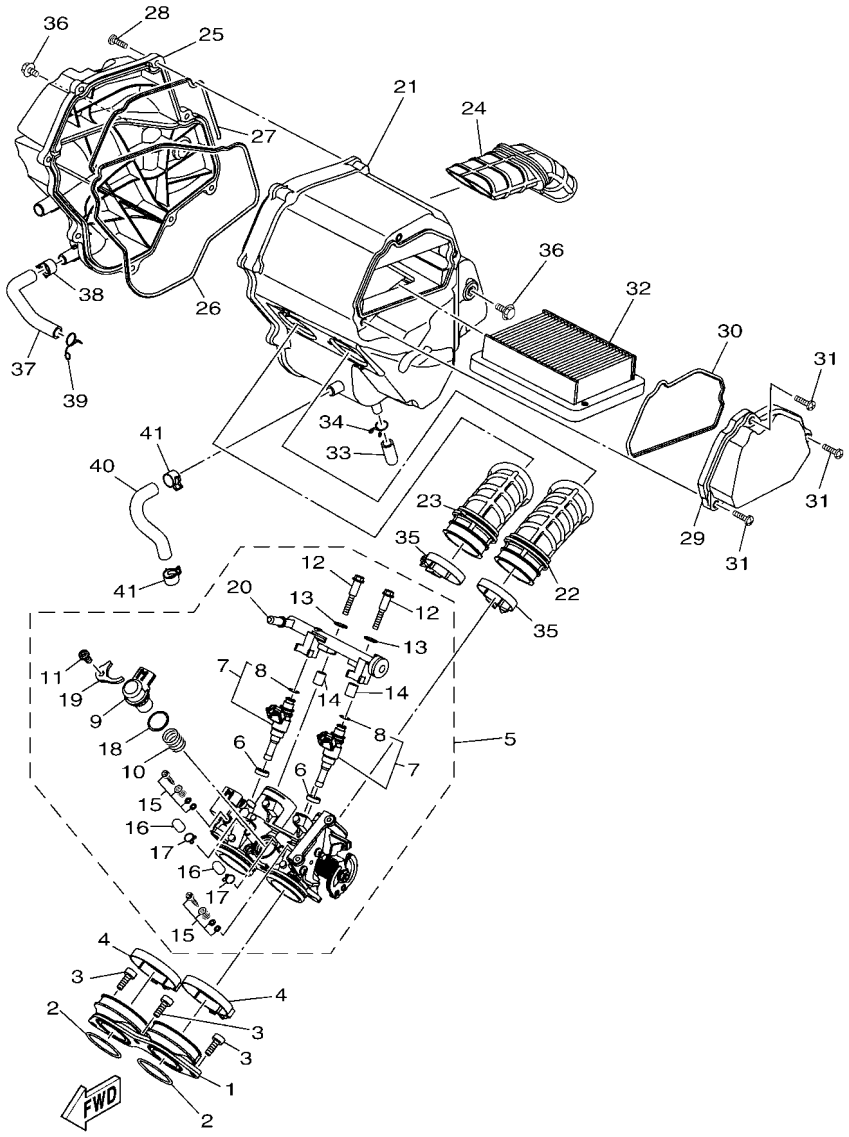

FIG. 8 ADMISION — INTAKE

REF. Nº	CODIGO Nº PART NO.	DESCRIPCION DESCRIPTION	2YP6					OBSERVACIONES REMARKS
28	97702–50025	TORNILLO ROSCA HEMBRA SCREW, TAPPING	8					
29	1WD–E4422–00	TAPA CAJA DE FILTRO 2 CAP, CLEANER CASE 2	1					
30	1WD–E4462–00	SELLO SEAL	1					
31	98902–05020	TORNILLO DE LIGAR SCREW, BIND	3					
32	1WD–E4451–00	ELEMENTO DEL FILTRO DEL AIRE ELEMENT, AIR CLEANER	1					
33	52B–E443E–00	TUBO, DRENAJE PIPE, DRAIN	1					
34	90467–110A3	PRESILLA CLIP	1					
35	54P–E3474–00	BANDA BAND	2					
36	95822–06010	TORNILLO DE REBORDE BOLT, FLANGE	2					
37	1WD–E3543–01	TUBO DE AIRE HOSE, AIR	1					
38	90467–13802	PRESILLA CLIP	1					
39	90467–12052	PRESILLA CLIP	1					
40	1WD–E5373–01	MANGUELA DE RESPIRADERO PIPE, BREATHER	1					
41	90467–13802	PRESILLA CLIP	2					

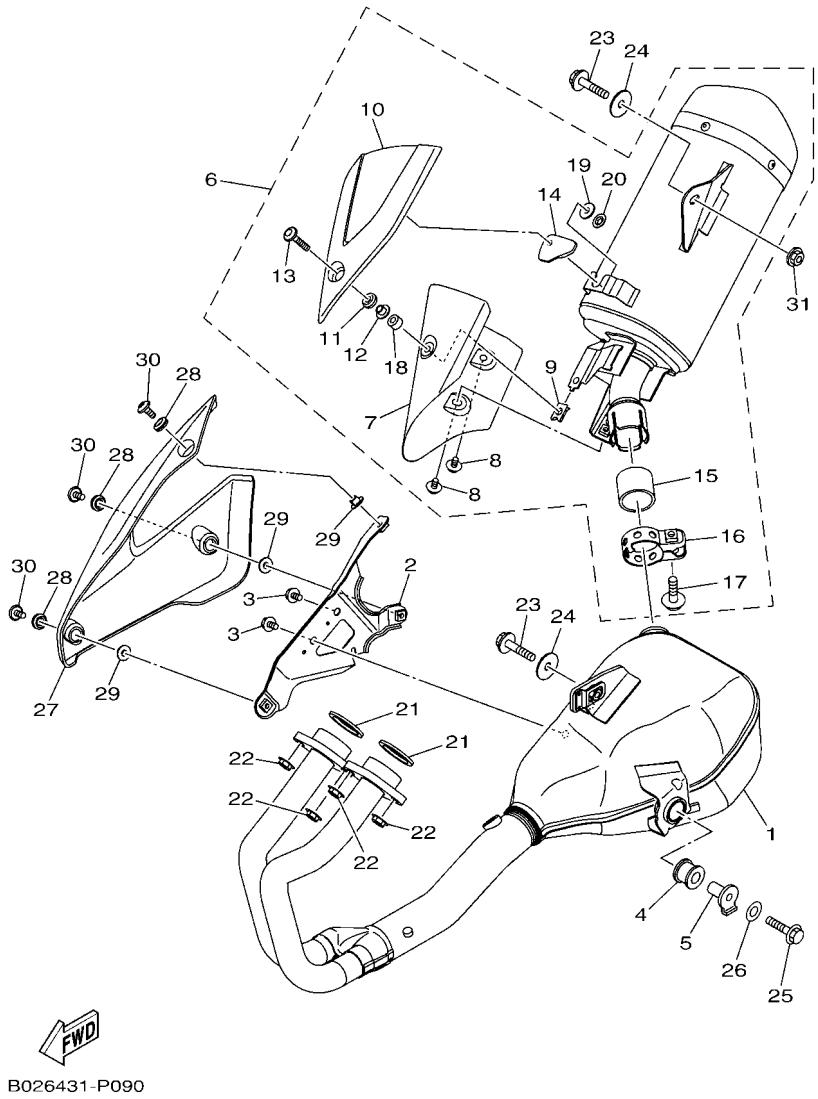

FIG. 9 DESCARGA — EXHAUST

REF. Nº	CODIGO Nº PART NO.	DESCRIPCION DESCRIPTION	2YP6					OBSERVACIONES REMARKS
1	2MS–E4602–00	TUBO DE ESPAPE COMPLETO EXHAUST PIPE COMP.	1					
2	1WD–E473L–00	SOPORTE 3 BRACKET 3	1					
3	95027–06010	PERNO, DE BRIDA BOLT, FLANGE	2					
4	5TP–E4747–00	AMORTIGUADOR DE SILENCIADOR DAMPER, MUFFLER	1					
5	1WD–E4775–00	TUERCA NUT	1					
6	2MS–E4710–00	TUBO DE ESCAPE COMPLETO 1 MUFFLER ASSY 1	1					
7	1WD–E4758–00	.PROTECTOR DE SILENCIADOR .PROTECTOR, SILENCER	1					
8	90111–06802	.TORNILLO .BOLT,HEX. SOCKET BUTTON	2					
9	90183–06818	.TUERCA DE RESORTE .NUT, SPRING	1					
10	1WD–E4728–00	.PROTECTOR DE SILENCIADOR .PROTECTOR, MUFFLER 2	1					
11	90480–12581	.TAPON .GROMMET	1					
12	90387–087L0	.ESPACIADOR .COLLAR	1					
13	90111–06847	.TORNILLO .BOLT,HEX. SOCKET BUTTON	1					
14	1WD–E4763–00	.ESPACIADOR .SPACER	1					
15	54D–E4714–00	.EMPAQUE DE SILENCIADOR .GASKET, MUFFLER	1					
16	1WD–E4715–00	.BANDA DE SILENCIADOR .BAND, MUFFLER	1					
17	95027–08035	.PERNO, DE BRIDA .BOLT, FLANGE	1					
18	90387–068N4	.ESPACIADOR .COLLAR	1					
19	90201–06088	.ARANDELA PLANA .WASHER, PLATE	1					
20	90183–06011	.TUERCA DE RESORTE .NUT, SPRING	1					
21	1WD–E4613–00	JUNTA, TUBO DE ESCAPE GASKET, EXHAUST PIPE	2					
22	95707–08500	TUERCA DE BRIDA NUT, FLANGE	4					
23	90105–088G7	TORNILLO BOLT, FLANGE	2					
24	90201–08612	ARANDELA PLANA WASHER, PLATE	2					
25	95817–08030	TORNILLO BOLT, FLANGE	1					
26	90201–087F0	ARANDELA PLANA WASHER, PLATE	1					
27	1WD–E4628–00	PROTECTOR DE TUBO DE ESCAPE PROTECTOR, EXHAUST PIPE	1					

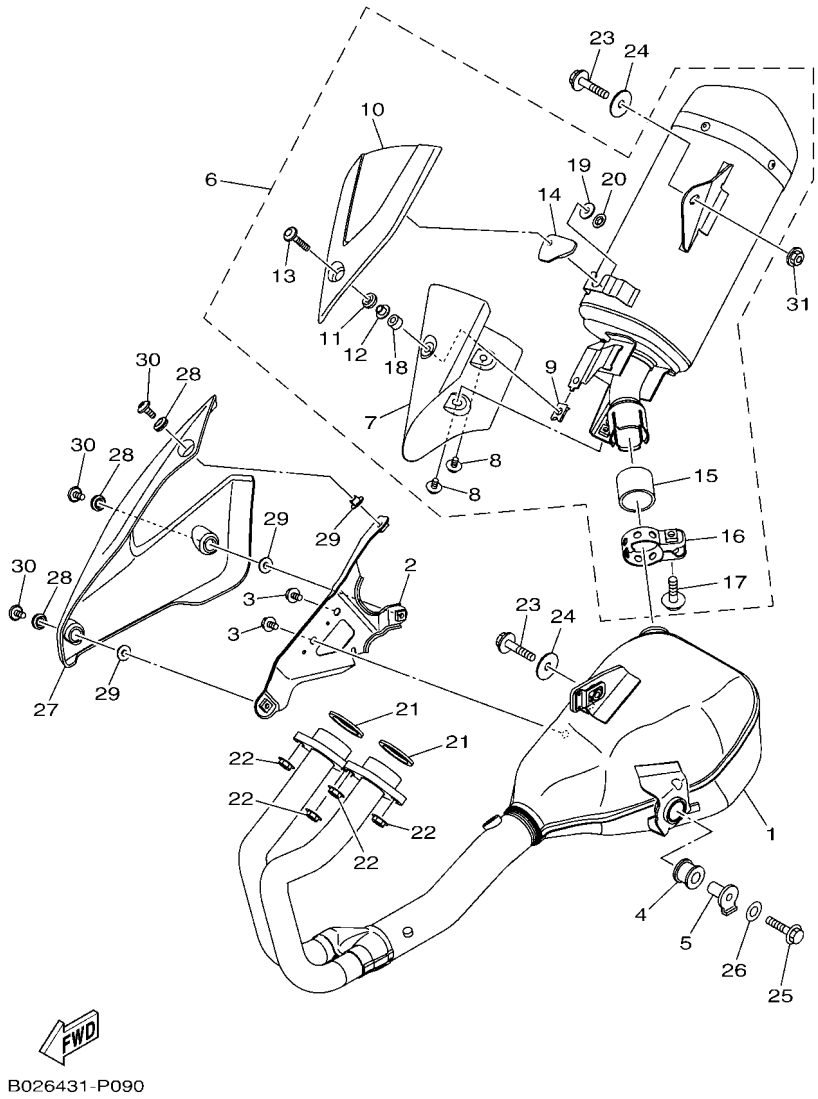

FIG. 9 DESCARGA — EXHAUST

REF. Nº	CODIGO Nº PART NO.	DESCRIPCION DESCRIPTION	2YP6					OBSERVACIONES REMARKS
28	90480–12581	TAPON GROMMET	3					
29	90387–087L0	ESPACIADOR COLLAR	3					
30	90111–06152	TORNILLO BOLT,HEX. SOCKET BUTTON	3					
31	95607–08200	TUERCA DE AUTO-CIERRE NUT, SELF-LOCKING	1					

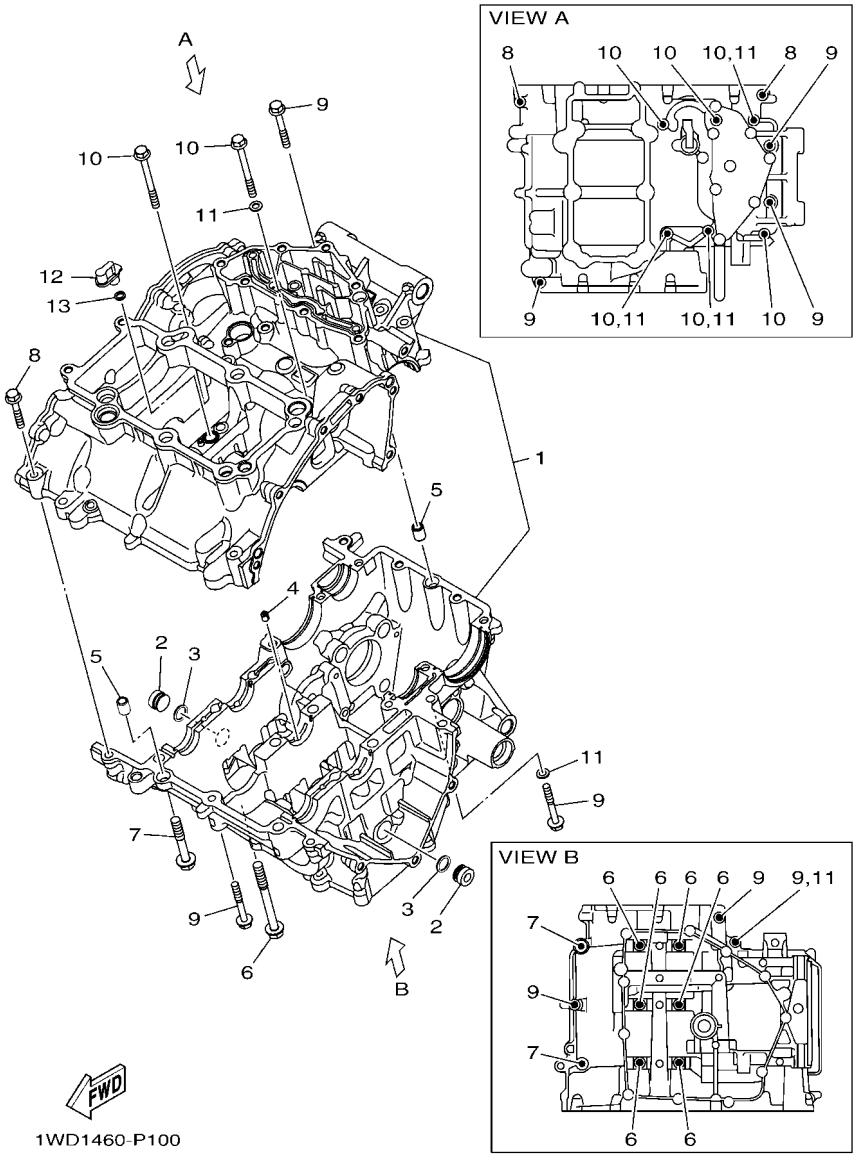

FIG. 10 CARTER — CRANKCASE

REF. Nº	CODIGO Nº PART NO.	DESCRIPCION DESCRIPTION	2YP6					OBSERVACIONES REMARKS
1	1WD–E5150–10	CARTER COMPLETO CRANKCASE ASSY	1					
2	90338–16262	TAPON PLUG	2					
3	93210–12803	ANILLO O O-RING	2					
4	1WD–E5148–00	BOQUILLA 2 NOZZLE 2	1					
5	99530–10014	PASADOR, DE ESPIGA PIN, DOWEL	2					
6	90105–088F7	TORNILLO BOLT, FLANGE	6					
7	90105–088G0	TORNILLO BOLT, FLANGE	2					
8	95812–06035	TORNILLO DE REBORDE BOLT, FLANGE	2					
9	95812–06045	TORNILLO DE REBORDE BOLT, FLANGE	6					
10	95812–06065	TORNILLO DE REBORDE BOLT, FLANGE	6					
11	90430–06014	JUNTA GASKET	4					
12	1WD–E5155–00	BOQUILLA 3 NOZZLE 3	1					
13	93210–068F7	ANILLO O O-RING	1					

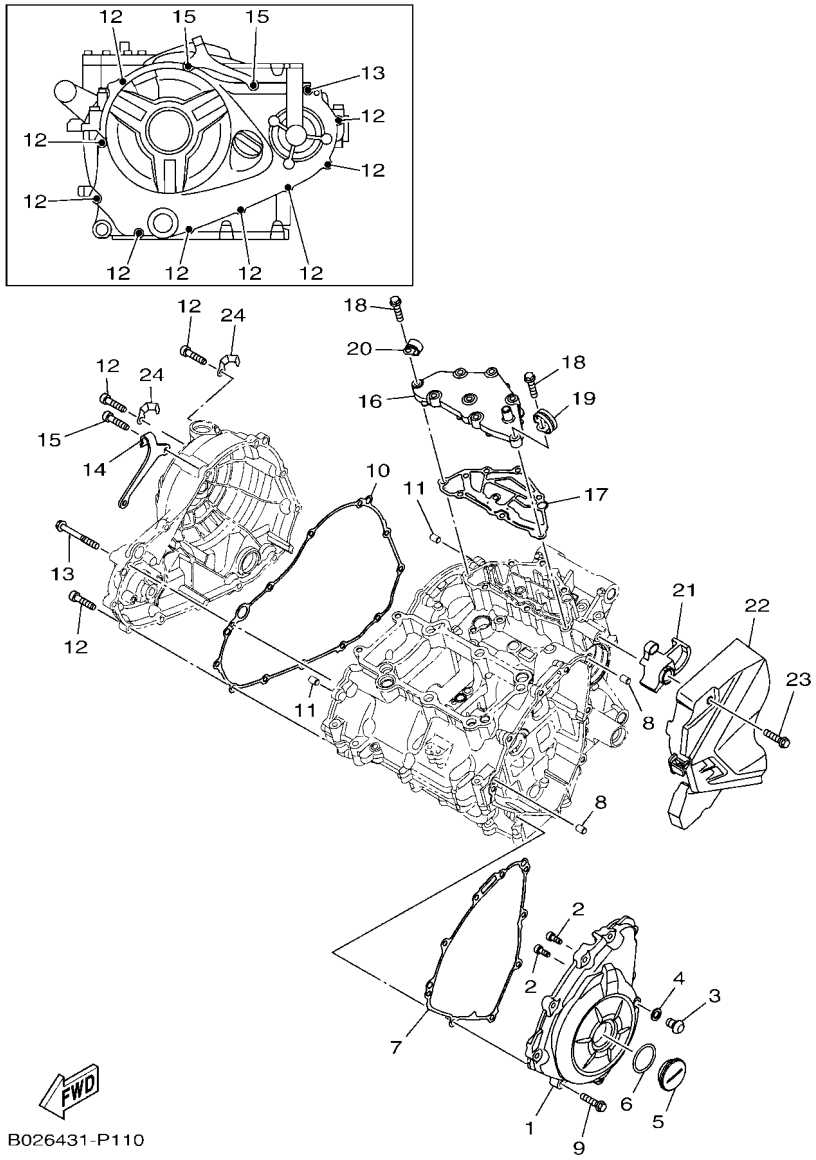

FIG. 11 CUBIERTA DE CARTER 1 — CRANKCASE COVER 1

REF. Nº	CODIGO Nº PART NO.	DESCRIPCION DESCRIPTION	2YP6					OBSERVACIONES REMARKS
1	1WD–E5411–00	CUBIERTA DE CARTER 1 COVER, CRANKCASE 1	1					
2	91312–05012	TORNILLO BOLT	2					
3	92014–08012	PERNO BOLT, BUTTON HEAD	1					
4	90430–08143	JUNTA GASKET	1					
5	90340–32819	TORNILLO, DE DRENAJE PLUG, STRAIGHT SCREW	1					
6	93210–32816	ANILLO O O-RING	1					
7	1WD–E5451–00	EMPAQ DE CUBIERTA DE CARTER GASKET, CRANKCASE COVER 1	1					
8	99530–08012	PASADOR, DE ESPIGA PIN, DOWEL	2					
9	95022–06025	PERNO, DE BRIDA BOLT, FLANGE	9					
10	1WD–E5461–00	JUNTA TAPA CARTER DERECHO 2 GASKET, CRANKCASE COVER 2	1					
11	99530–08012	PASADOR, DE ESPIGA PIN, DOWEL	2					
12	95022–06025	PERNO, DE BRIDA BOLT, FLANGE	9					
13	95022–06050	PERNO, DE BRIDA BOLT, FLANGE	1					
14	2MS–E5441–00	SOSTEN DE CABLE DE EMBRAGUE HOLDER, CLUTCH CABLE	1					
15	91312–06025	TORNILLO ALLEN BOLT, HEXAGON SOCKET HEAD	2					
16	1WD–E5413–10	CUBIERTA COVER	1					
17	1WD–E5462–00	EMPAQ CUBIERTA DE CARTER 3 GASKET, CRANKCASE COVER 3	1					
18	95022–06025	PERNO, DE BRIDA BOLT, FLANGE	8					
19	90462–08812	BRIDA CLAMP	1					
20	90462–08806	BRIDA CLAMP	1					
21	1WD–E5377–00	GUIA DE ENTRADA GUIDE, INLET	1					
22	1WD–E5418–00	CUBIERTA CAJA DE CADENA COVER, CHAIN CASE	1					
23	95022–06025	PERNO, DE BRIDA BOLT, FLANGE	2					
24	90462–08225	BRIDA CLAMP	2					

FIG. 12 EMBRAGUE DEL ARRANQUE — STARTER CLUTCH

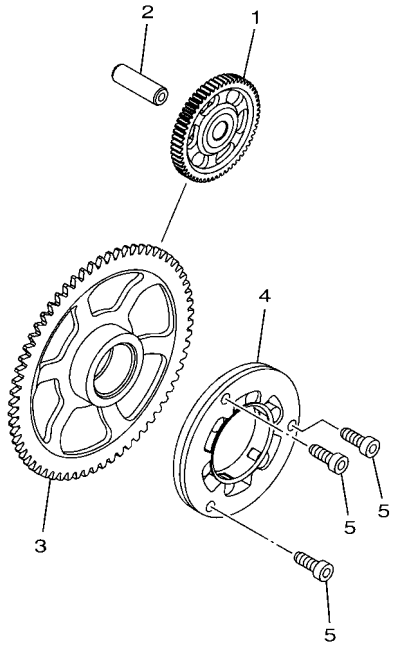

1WD1460-P120

REF. Nº	CODIGO Nº PART NO.	DESCRIPCION DESCRIPTION	2YP6					OBSERVACIONES REMARKS
1	1WD–E5514–00	ENGRANAJE 2 GEAR 2	1					
2	44D–E5521–00	EJE 1 SHAFT 1	1					
3	1WD–E5515–00	ENGRANAJE 3 GEAR 3	1					
4	1WD–E5580–00	ENSAMBLE EXT.EMBRAGUE ARRANQUE STARTER CLUTCH OUTER ASSY	1					
5	90110–06161	TORNILLO ALLEN BOLT, HEXAGON SOCKET HEAD	3					

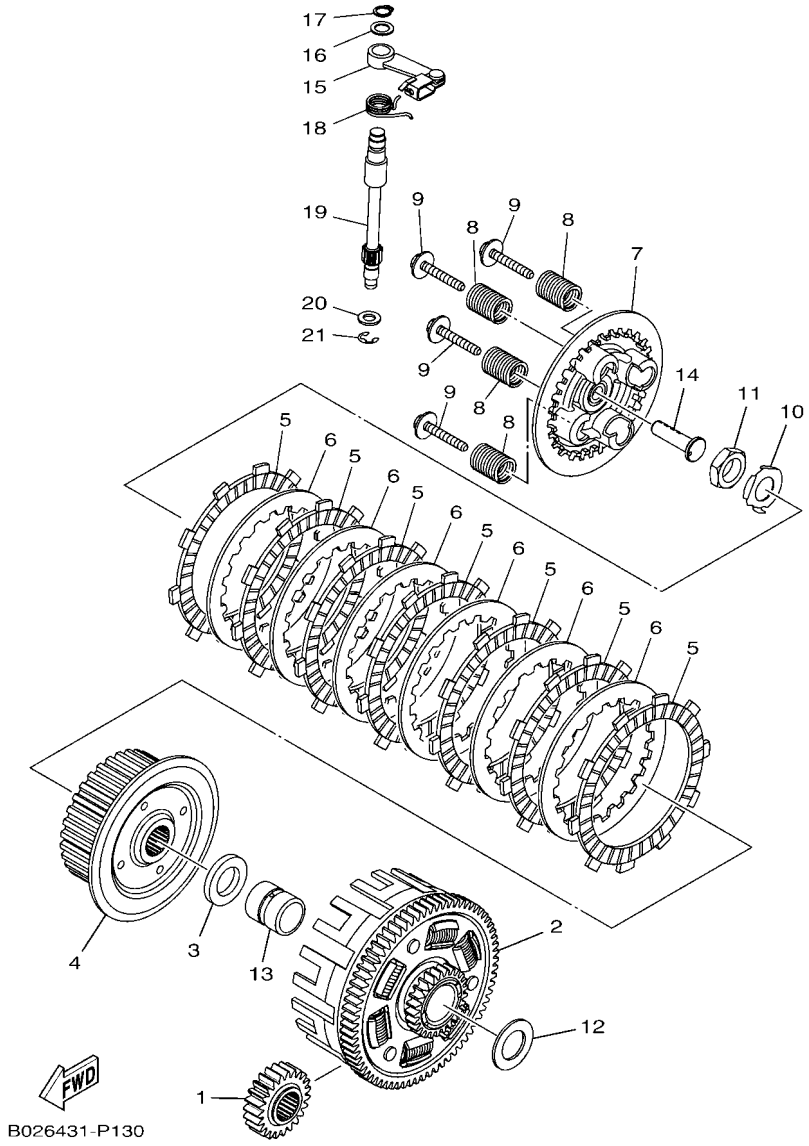

FIG. 13 EMBRAGUE — CLUTCH

REF. Nº	CODIGO Nº PART NO.	DESCRIPCION DESCRIPTION	2YP6					OBSERVACIONES REMARKS
1	1WD–E6111–00	ENGRANAJE TRACC.PRIMARIA GEAR, PRIMARY DRIVE	1					
2	2MS–E6150–00	CAMPANA DE EMBRAGUE PRIMARY DRIVEN GEAR COMP.	1					
3	1WD–E6154–00	ARANDELA, DE EMPUJE 1 PLATE, THRUST 1	1					
4	2MS–E6371–00	CUBO, DE EMBRAGUE BOSS, CLUTCH	1					
5	1WD–E6331–00	DISCO, DE FRICCION 2 PLATE, FRICTION 2	7					
6	1WD–E6324–00	PLACA DE EMBRAGUE PLATE, CLUTCH 1	6					
7	2MS–E6350–00	PLACA DE PRESION COMPLETA PRESSURE PLATE ASSY	1					
8	2MS–E6333–10	RESORTE DE EMBRAGUE 1 SPRING, CLUTCH 1	4					
9	1WD–E6337–00	TORNILLO DE RESORTE SCREW, SPRING	4					
10	90215–18800	ARANDELA DE CIERRE WASHER, LOCK	1					
11	90170–18221	TUERCA NUT	1					
12	90201–22013	ARANDELA PLANA WASHER, PLATE	1					
13	1WD–E6181–00	SEPARADOR SPACER 1	1					
14	1WD–E6356–00	VARILLA DE EMPUJE 1 ROD, PUSH 1	1					
15	2MS–E6340–00	PALANCA DE EMPUJE COMPLETA PUSH LEVER ASSY	1					
16	90201–10843	ARANDELA PLANA WASHER, PLATE	1					
17	99009–10400	PRESILLA REDONDA CIRCLIP	1					
18	90508–18136	RESORTE DE TORSION SPRING, TORSION	1					
19	1WD–16382–00	EJE DE PALANCA DE EMPUJE AXLE, PUSH LEVER	1					
20	92902–08600	ARANDELA WASHER, PLATE	1					
21	99002–07600	PRESILLA REDONDA CIRCLIP(E)	1					

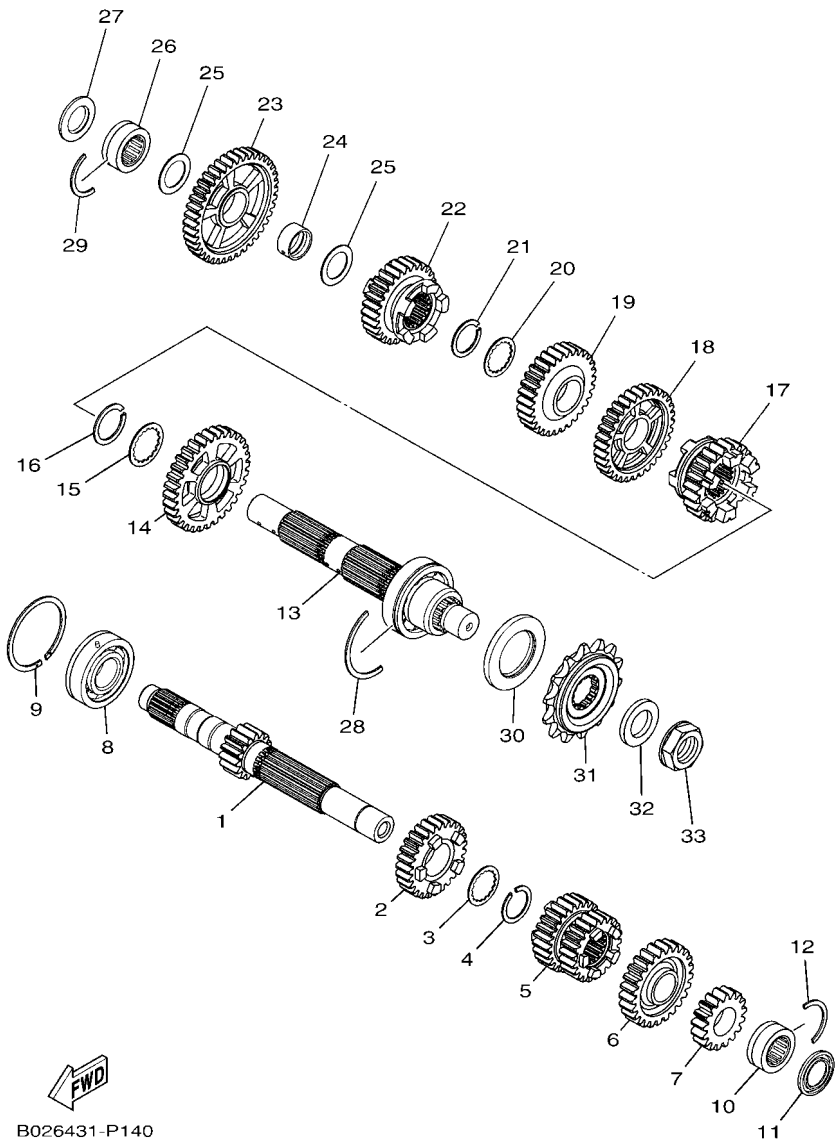

FIG. 14 TRANSMISION — TRANSMISSION

REF. Nº	CODIGO Nº PART NO.	DESCRIPCION DESCRIPTION	2YP6					OBSERVACIONES REMARKS
1	2MS–E7411–00	EJE PRIMARIO (14T) AXLE, MAIN (14T)	1					
2	2MS–E7151–00	ENGRANAJE PINON DE 5TA (25T) GEAR, 5TH PINION (25T)	1					
3	90214–22008	ARANDELA DE POSICION WASHER, CLAW	1					
4	93440–24200	SEGURO CIRCLIP	1					
5	2MS–E7131–00	ENGRANAJE PINON DE 3RA(23/23T) GEAR, 3RD PINION (23T/23T)	1					
6	2MS–E7161–00	ENGRANAJE PINON 6TA (30T) GEAR, 6TH PINION (30T)	1					
7	2MS–E7121–00	ENGRANAJE PINON DE 2DA (17T) GEAR, 2ND PINION (17T)	1					
8	93306–255Y9	COJINETE BEARING	1					
9	93440–52009	SEGURO CIRCLIP	1					
10	93311–420Y3	COJINETE DE RODILLOS BEARING	1					
11	93101–20802	SELLO ACEITE OIL SEAL	1					
12	278–17425–00	PRESILLA REDONDA 2 CIRCLIP 2	1					
13	1WD–E7402–00	EJE DE TRACCION COMPLETO DRIVE AXLE ASSY	1					
14	2MS–E7221–00	ENGRANAJE RUEDA DE 2DA (31T) GEAR, 2ND WHEEL (31T)	1					
15	90209–25011	ARANDELA DE SEPARACION WASHER	1					
16	93440–28184	SEGURO CIRCLIP	1					
17	2MS–E7261–00	ENGRANAJE RUEDA DE 6TA (24T) GEAR, 6TH WHEEL (24T)	1					
18	2MS–E7231–00	ENGRANAJE RUEDA DE 3RA (31T) GEAR, 3RD WHEEL (31T)	1					
19	2MS–E7241–00	ENGRANAJE DE RUEDA 4TA (25T) GEAR, 4TH WHEEL (25T)	1					
20	90214–22008	ARANDELA DE POSICION WASHER, CLAW	1					
21	93440–24200	SEGURO CIRCLIP	1					
22	2MS–E7251–00	ENGRANAJE RUEDA DE 5TA (23T) GEAR, 5TH WHEEL (23T)	1					
23	2MS–E7211–00	ENGRANAJE RUEDA DE 1RA (35T) GEAR, 1ST WHEEL (35T)	1					
24	90387–20814	ESPACIADOR COLLAR	1					
25	90201–20276	ARANDELA, PLACA (T=1.0) WASHER, PLATE (T=1.0)	2					
26	93311–420Y3	COJINETE DE RODILLOS BEARING	1					
27	93101–20802	SELLO ACEITE OIL SEAL	1					

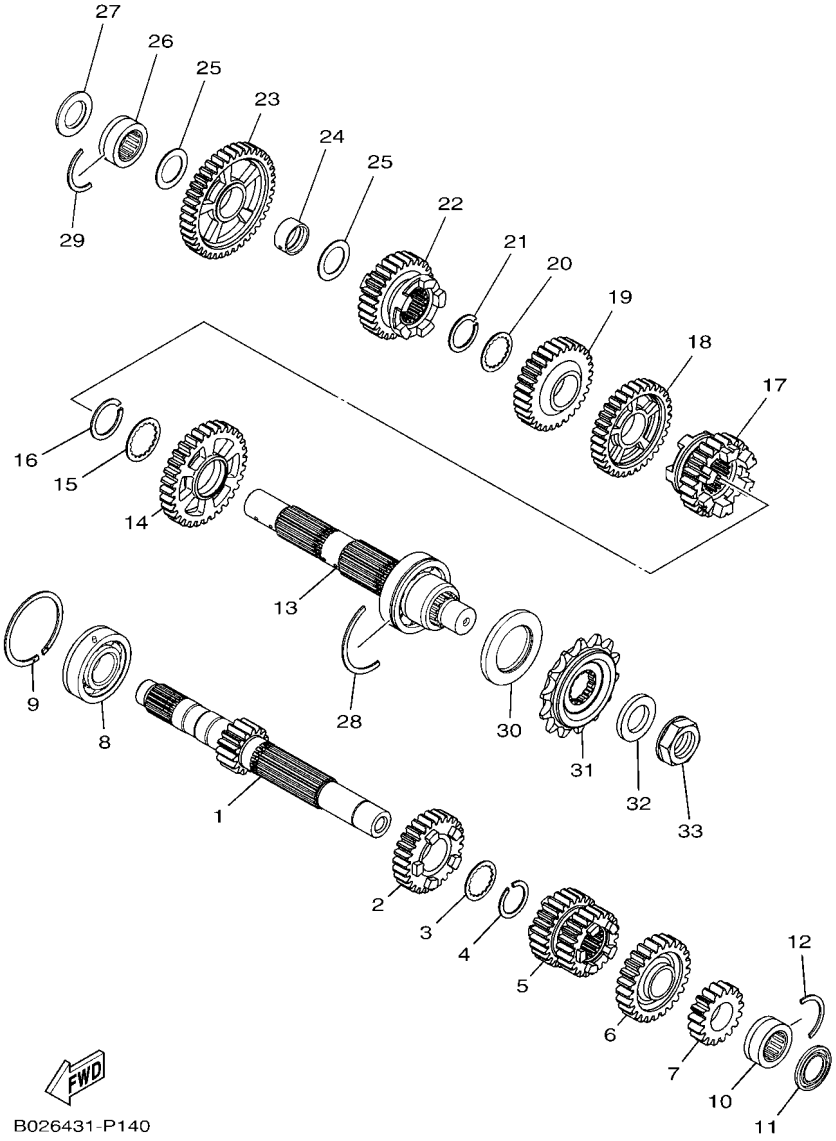

FIG. 14 TRANSMISION — TRANSMISSION

REF. Nº	CODIGO Nº PART NO.	DESCRIPCION DESCRIPTION	2YP6					OBSERVACIONES REMARKS
28	1WD–17424–00	PRESILLA REDONDA 1 CIRCLIP 1	1					
29	278–17425–00	PRESILLA REDONDA 2 CIRCLIP 2	1					
30	93102–35803	SELLO ACEITE OIL SEAL	1					
31	1WD–E7460–00	CORONA (14T) SPROCKET, DRIVE (14T)	1					
32	90201–20023	ARANDELA PLANA WASHER, PLATE	1					
33	90179–20013	TUERCA NUT	1					

FIG. 15 LEVA DE CAMBIO & HORQUILLA — SHIFT CAM & FORK

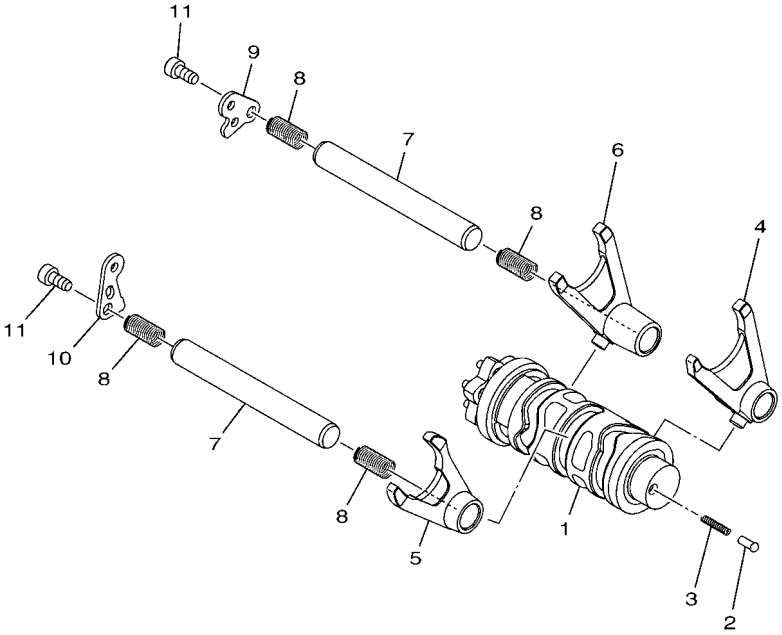

1WD1460-P150

REF. Nº	CODIGO Nº PART NO.	DESCRIPCION DESCRIPTION	2YP6					OBSERVACIONES REMARKS
1	1WD–E8540–10	LEVA DEL CAMBIO COMPLETA SHIFT CAM ASSY	1					
2	5TP–E8542–00	PUNTO MUERTO POINT, NEUTRAL	1					
3	90501–06022	RESORTE DE COMPRESION SPRING, COMPRESSION	1					
4	1WD–E8511–00	HORQUILLA DEL CAMBIO 1 FORK, SHIFT 1	1					
5	1WD–E8512–00	HORQUILLA DEL CAMBIO 2 FORK, SHIFT 2	1					
6	1WD–E8513–00	HORQUILLA DEL CAMBIO 3 FORK, SHIFT 3	1					
7	1WD–E8531–00	BARRA GUIA HORQ. CAMBIO 1 BAR, SHIFT FORK GUIDE 1	2					
8	90501–080A2	RESORTE DE COMPRESION SPRING, COMPRESSION	4					
9	1WD–E8536–00	TOPE DE PALANCA SELECTOR STOPPER, SHIFT BAR	1					
10	1WD–E8562–00	PLACA DE TOPE 2 PLATE, STOPPER 2	1					
11	90110–06182	TORNILLO ALLEN BOLT, HEXAGON SOCKET HEAD	2					

FIG. 16 EJE DE CAMBIO & PEDAL — SHIFT SHAFT

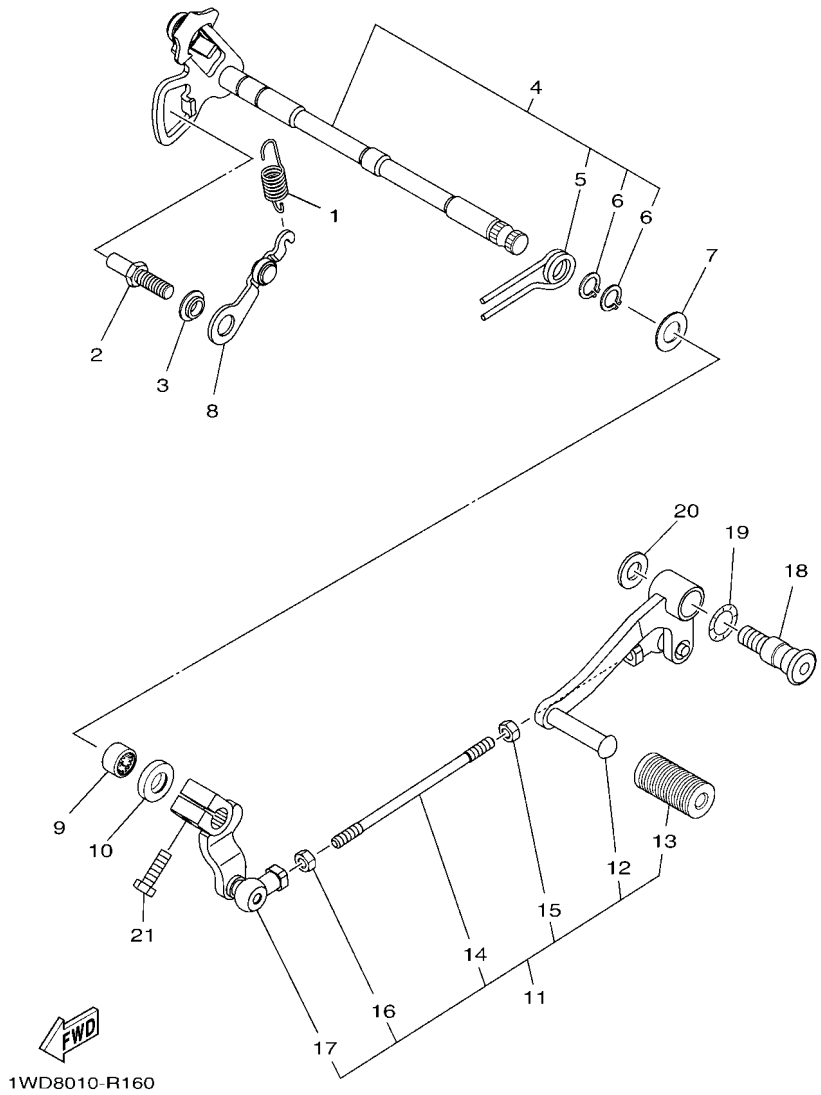

REF. Nº	CODIGO Nº PART NO.	DESCRIPCION DESCRIPTION	2YP6					OBSERVACIONES REMARKS
1	1WD–E8337–00	RESORTE SPRING	1					
2	1WD–E8127–00	PASADOR DE PALANCA STOPPER, SCREW	1					
3	1WD–E8175–00	ESPACIADOR SPACER	1					
4	1WD–E8101–00	EJE SELECTOR COMPLETO SHIFT SHAFT ASSY	1					
5	90508–29806	.RESORTE DE TORSION .SPRING, TORSION	1					
6	99009–12400	.PRESILLA REDONDA .CIRCLIP	2					
7	90201–127E1	ARANDELA PLANA WASHER, PLATE	1					
8	1WD–E8140–00	PALANCA DE TOPE COMPLETA STOPPER LEVER ASSY	1					
9	93317–11295	COJINETE BEARING	1					
10	93102–12891	SELLO ACEITE OIL SEAL	1					
11	1WD–E8110–00	PEDAL DE CAMBIO COMPLETO SHIFT PEDAL ASSY	1					
12	1WD–E8111–00	.PEDAL DEL CAMBIO .PEDAL, SHIFT	1					
13	1EG–E8113–01	.FUNDA DEL PEDAL DEL CAMBIO .COVER, SHIFT PEDAL	1					
14	1WD–E8115–00	.VARILLA DEL CAMBIO .ROD, SHIFT	1					
15	90170–06023	.TUERCA .NUT	1					
16	95302–06600	.TUERCA .NUT, HEXAGON	1					
17	1WD–E8112–00	.BRAZO DEL CAMBIO .ARM, SHIFT	1					
18	45P–F7261–00	EJE SHAFT	1					
19	90206–14001	ARANDELA ONDULADA WASHER, WAVE	1					
20	90201–10021	ARANDELA PLANA WASHER, PLATE	1					
21	97012–06020	PERNO BOLT	1					

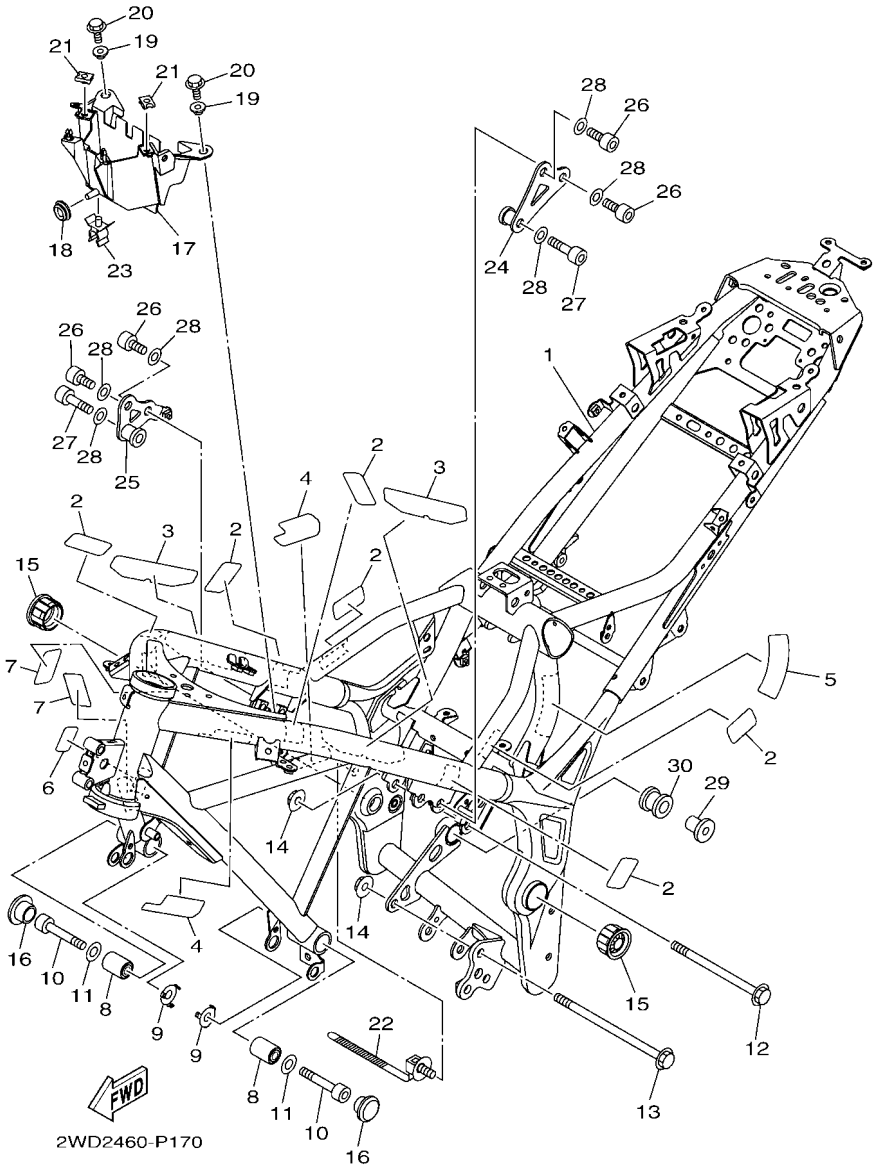

FIG. 17 CUADRO — FRAME

REF. Nº	CODIGO Nº PART NO.	DESCRIPCION DESCRIPTION	2YP6					OBSERVACIONES REMARKS
1	1WD–F1110–11	ARMAZON COMPLETO FRAME COMP.	1					
2	1WD–F113B–00	AMORTIGUADOR DAMPER	6					
3	1WD–F112C–00	AMORTIGUADOR 2 DAMPER 2	2					
4	1WD–F117G–00	PROTECTOR PROTECTOR	2					
5	1WD–F1652–00	PROTECTOR PROTECTOR	1					
6	1WD–F193A–00	BOBINA CONJUNTO PROTECTOR	1					
7	5D9–F414G–00	SELLO SEAL	2					
8	1WD–F2123–00	BUJE 1 BUSH 1	2					
9	1WD–F191B–00	PLACA 1 PLATE 1	2					
10	91317–10060	PERNO BOLT	2					
11	92902–10200	ARANDELA WASHER	2					
12	90105–10889	TORNILLO BOLT, FLANGE	1					
13	90105–10891	TORNILLO BOLT, FLANGE	1					
14	90179–10805	TUERCA NUT	2					
15	1WD–F135F–00	CUBIERTA COVER	2					
16	90338–23801	TAPON PLUG	2					
17	1WD–F1171–00	CAJA BOX	1					
18	90480–13398	TAPON GROMMET	1					
19	90387–07819	ESPACIADOR COLLAR	2					
20	95022–06014	PERNO, DE BRIDA BOLT, FLANGE	2					
21	90183–06818	TUERCA DE RESORTE NUT, SPRING	2					
22	90464–30009	BRIDA CLAMP	1					
23	90464–12015	BRIDA CLAMP	1					
24	1WD–F122A–00	APOYO 1 STAY 1	1					
25	1WD–F122B–00	APOYO 2 STAY 2	1					
26	91317–10020	PERNO BOLT	4					
27	91317–10045	PERNO BOLT	2					

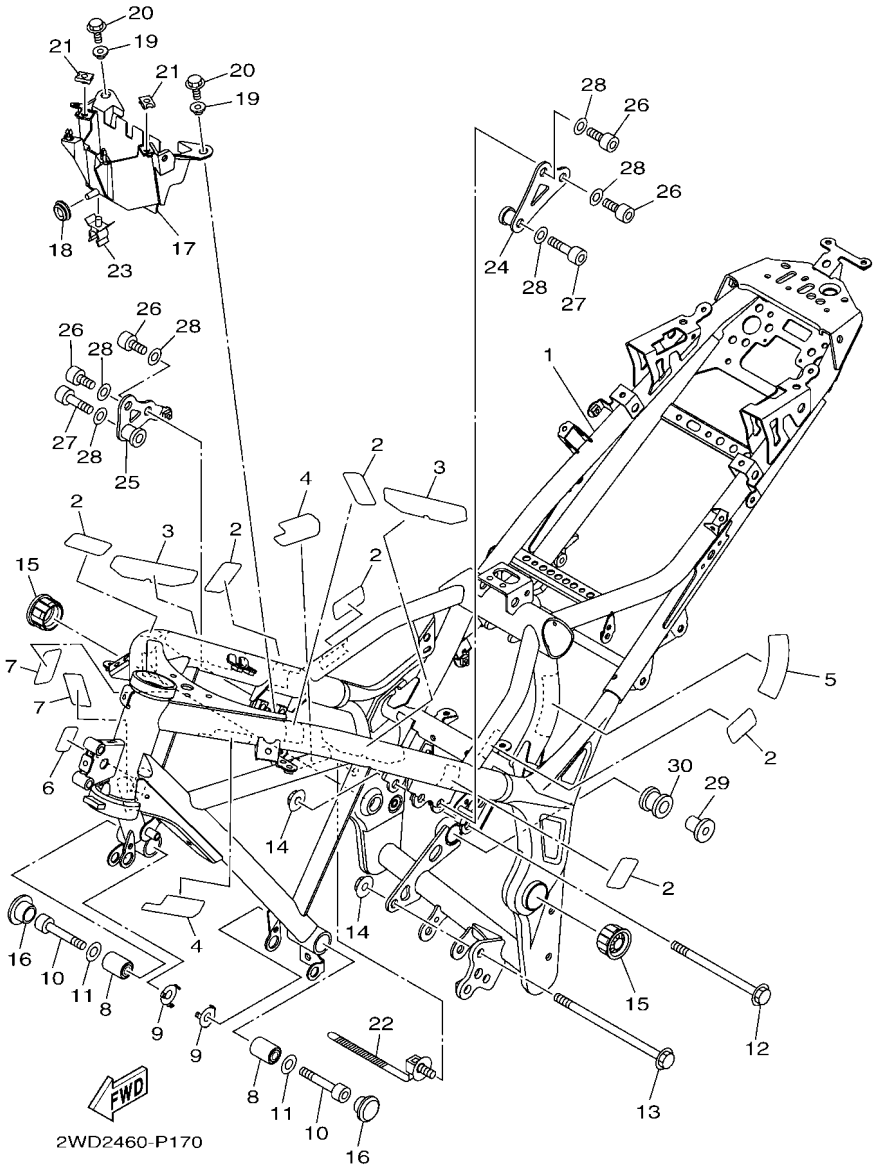

FIG. 17 CUADRO — FRAME

REF. Nº	CODIGO Nº PART NO.	DESCRIPCION DESCRIPTION	2YP6					OBSERVACIONES REMARKS
28	92907–10600	ARANDELA WASHER, PLATE	6					
29	90387–08813	ESPACIADOR COLLAR	1					
30	5TP–E4747–00	AMORTIGUADOR DE SILENCIADOR DAMPER, MUFFLER	1					

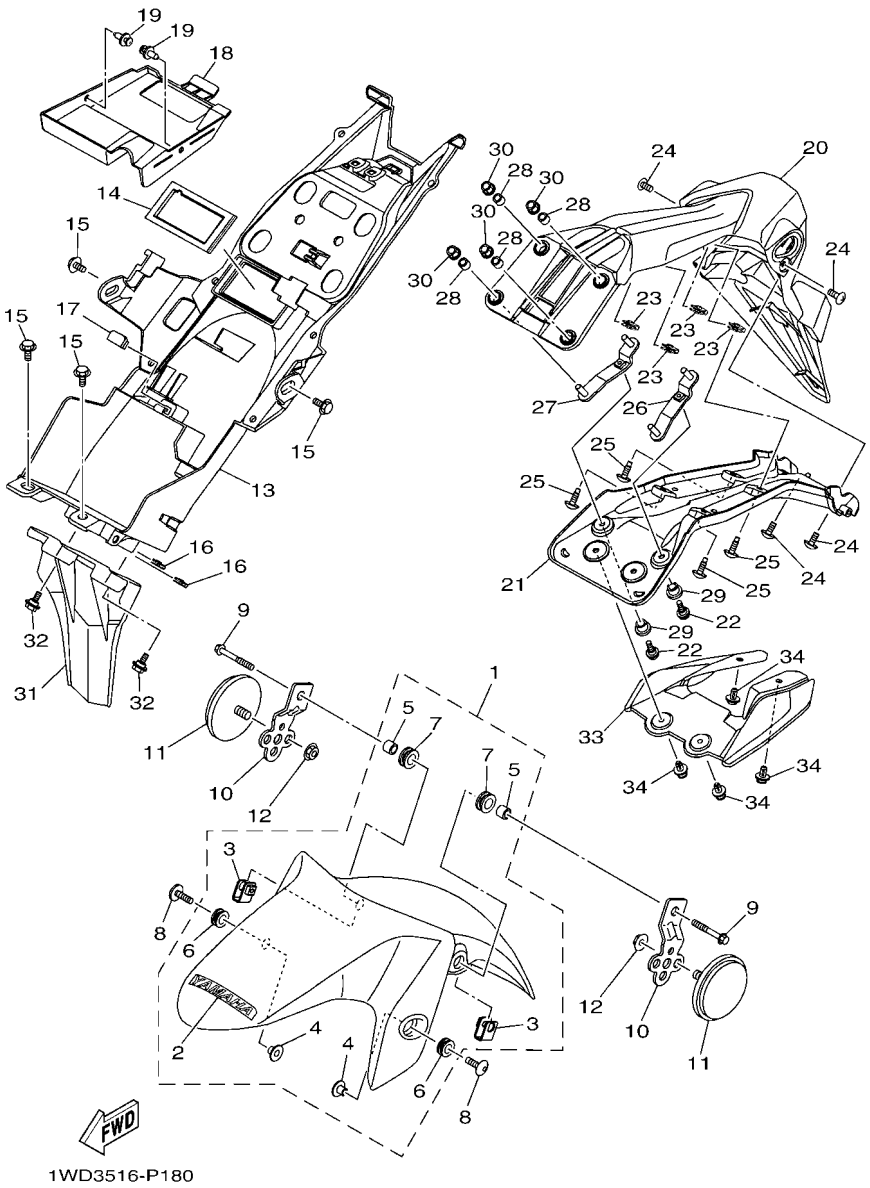

FIG. 18 GUARDABARRO — FENDER

REF. Nº	CODIGO Nº PART NO.	DESCRIPCION DESCRIPTION	2YP6					OBSERVACIONES REMARKS
1	1WD–XF151–70–P1	GUARDABARRO DELANTERO FENDER, FRONT	1					UR PARA DPBMC UR FOR DPBMC
	1WD–XF151–00–P6	GUARDABARRO DELANTERO FENDER, FRONT	1					UR PARA MNM3 UR FOR MNM3
	1WD–XF151–20–P2	GUARDABARRO DELANTERO FENDER, FRONT	1					UR VRC1 PARA WM6 UR VRC1 FOR WM6
2	1WD–F153E–20	.EMBLEMA, YAMAHA .EMBLEM, YAMAHA	1					UR PARA DPBMC,WM6 UR FOR DPBMC,WM6
	1WD–F153E–30	.EMBLEMA, YAMAHA .EMBLEM, YAMAHA	1					UR PARA MNM3 UR FOR MNM3
3	1WD–F1586–00	.SOPORTE .BRACKET	2					
4	90387–068C5	.ESPACIADOR .COLLAR	2					
5	90387–068L0	.ESPACIADOR .COLLAR	2					
6	90480–12815	.TAPON .GROMMET	2					
7	90480–15809	.TAPON .GROMMET	2					
8	90111–06137	TORNILLO BOLT,HEX. SOCKET BUTTON	2					
9	95027–06045	PERNO, DE BRIDA BOLT, FLANGE	2					
10	1WD–F113J–00	SOPORTE, REFLECTOR 1 BRACKET, REFLECTOR 1	2					
11	4AG–85111–00	REFLECTOR DELANTERA 1 REFLECTOR, FRONT 1	2					
12	95702–06500	TUERCA DE BRIDA NUT, FLANGE	2					
13	1WD–F1611–01	GUARDABARRO TRASERO FENDER, REAR	1					
14	1WD–F1669–00	SELLO SEAL	1					
15	90109–063F1	PERNO BOLT	4					
16	90183–05076	TUERCA DE RESORTE NUT, SPRING	2					
17	1WD–F16A2–00	SELLO 2 SEAL, 2	1					
18	1WD–F163E–00	CUBIERTA TRAS GUARDABARRO 2 COVER, REAR FENDER 2	1					
19	90269–06081	REMACHE RIVET	2					
20	1WD–F1629–01	GUARDABARRO INFERIOR GUARD, MUD	1					
21	1WD–F1617–00	SOPORTE DE GUARDABARRO BRACKET, FENDER	1					
22	90111–05021	TORNILLO BOLT,HEX. SOCKET BUTTON	2					
23	90183–050A7	TUERCA DE RESORTE NUT, SPRING	4					
24	97707–50016	TORNILLO SCREW, TRUSS HEAD TAPPING	4					

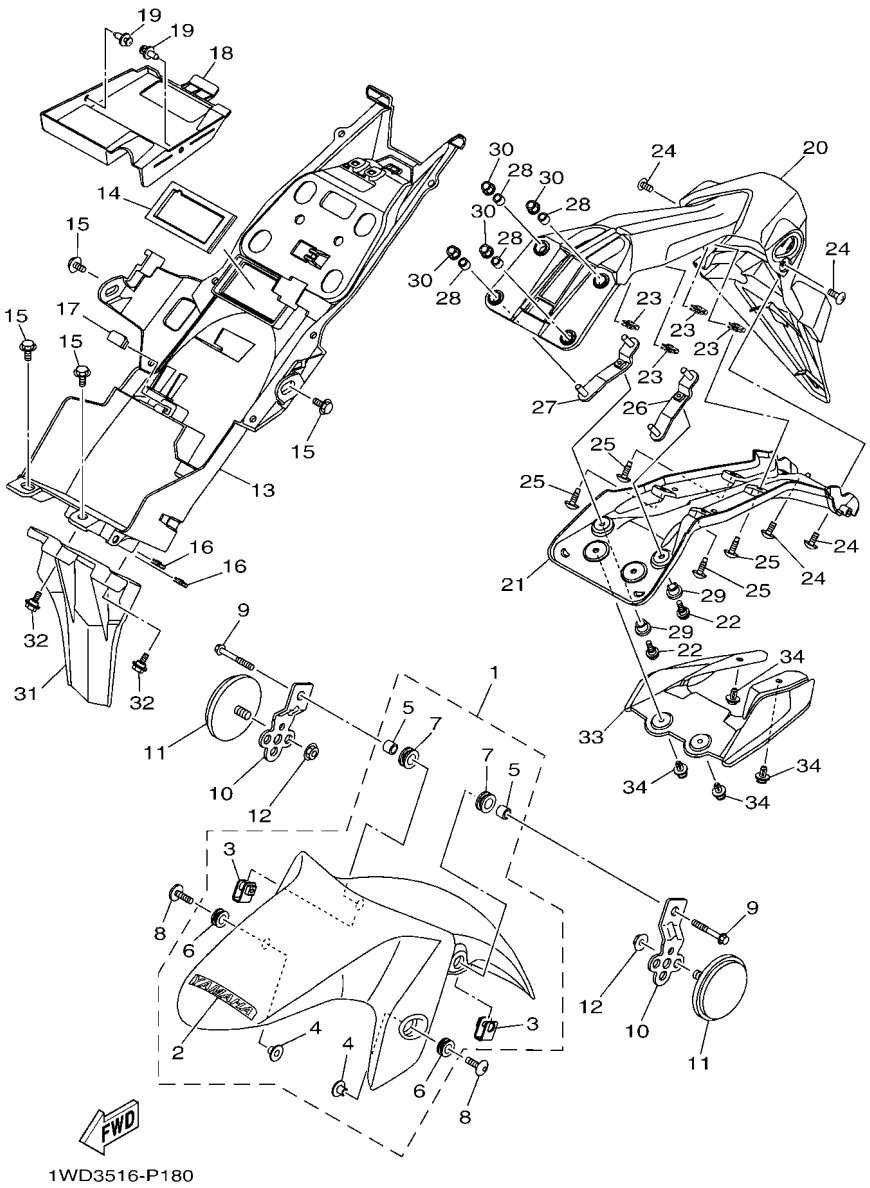

FIG. 18 GUARDABARRO — FENDER

REF. Nº	CODIGO Nº PART NO.	DESCRIPCION DESCRIPTION	2YP6					OBSERVACIONES REMARKS
25	90111–05018	TORNILLO BOLT,HEX. SOCKET BUTTON	4					
26	1WD–F1688–00	SOPORTE BRACKET, REAR STAY	1					
27	1WD–F1689–00	SOPORTE 2 BRACKET, REAR STAY 2	1					
28	90387–066J9	ESPACIADOR COLLAR	4					
29	90387–068L9	ESPACIADOR COLLAR	2					
30	95602–06200	TUERCA DE AUTO-CIERRE NUT, SELF-LOCKING	4					
31	1WD–F1621–00	CHARNELA FLAP	1					
32	90109–05003	PERNO BOLT	2					
33	1WD–F163A–00	CUBIERTA TRAS GUARDABARRO 1 COVER, REAR FENDER 1	1					
34	90269–06081	REMACHE RIVET	4					

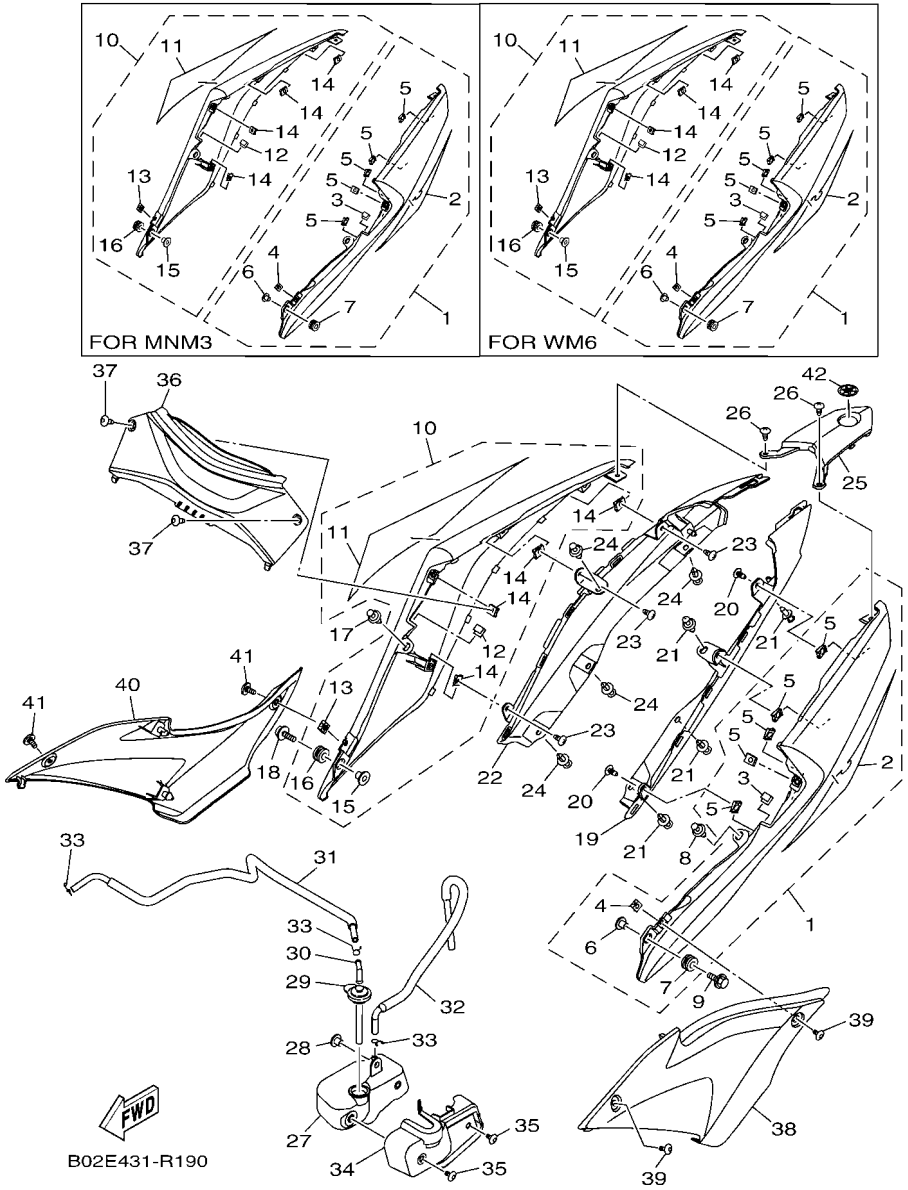

FIG. 19 CUBIERTA LATERAL — SIDE COVER

REF. Nº	CODIGO Nº PART NO.	DESCRIPCION DESCRIPTION	2YP6					OBSERVACIONES REMARKS
1	1WD–XF171–60–P1	JUEGO DE GRAFICOS 1 COVER, SIDE 1	1					UR PARA DPBMC UR FOR DPBMC
	1WD–XF171–00–P4	JUEGO DE GRAFICOS 1 COVER, SIDE 1	1					UR PARA MNM3 UR FOR MNM3
	1WD–XF171–40–P2	JUEGO DE GRAFICOS 1 COVER, SIDE 1	1					UR VRC1 PARA WM6 UR VRC1 FOR WM6
2	1WD–F17F1–60	.GRAFICO, 1 .GRAPHIC, 1	1					UR PARA DPBMC UR FOR DPBMC
	1WD–F17F1–70	.GRAFICO, 1 .GRAPHIC, 1	1					UR PARA MNM3 UR FOR MNM3
	1WD–F17F1–80	.GRAFICO, 1 .GRAPHIC, 1	1					UR PARA WM6 UR FOR WM6
3	31B–F8307–00	.SELLO .SEAL	1					
4	90183–050A7	.TUERCA DE RESORTE .NUT, SPRING	1					
5	90183–05807	.TUERCA DE RESORTE .NUT, SPRING	5					
6	90387–06899	.ESPACIADOR .COLLAR	1					
7	90480–12808	.TAPON .GROMMET	1					
8	90269–06081	REMACHE RIVET	1					
9	90119–06810	TORNILLO CON ARANDELA BOLT, WITH WASHER	1					
10	1WD–XF172–60–P1	TAPA LTERAL 2 COVER, SIDE 2	1					UR PARA DPBMC UR FOR DPBMC
	1WD–XF172–00–P4	TAPA LTERAL 2 COVER, SIDE 2	1					UR PARA MNM3 UR FOR MNM3
	1WD–XF172–40–P2	TAPA LTERAL 2 COVER, SIDE 2	1					UR VRC1 PARA WM6 UR VRC1 FOR WM6
11	1WD–F17F2–60	.GRAFICO, 2 .GRAPHIC, 2	1					UR PARA DPBMC UR FOR DPBMC
	1WD–F17F2–70	.GRAFICO, 2 .GRAPHIC, 2	1					UR PARA MNM3 UR FOR MNM3
	1WD–F17F2–80	.GRAFICO, 2 .GRAPHIC, 2	1					UR PARA WM6 UR FOR WM6
12	31B–F8307–00	.SELLO .SEAL	1					
13	90183–050A7	.TUERCA DE RESORTE .NUT, SPRING	1					
14	90183–05807	.TUERCA DE RESORTE .NUT, SPRING	4					
15	90387–06899	.ESPACIADOR .COLLAR	1					
16	90480–12808	.TAPON .GROMMET	1					
17	90269–06081	REMACHE RIVET	1					
18	90119–06810	TORNILLO CON ARANDELA BOLT, WITH WASHER	1					
19	1WD–F171L–00	MUELLE , CUBIERTA LATERAL 1 MOLE, SIDE COVER 1	1					

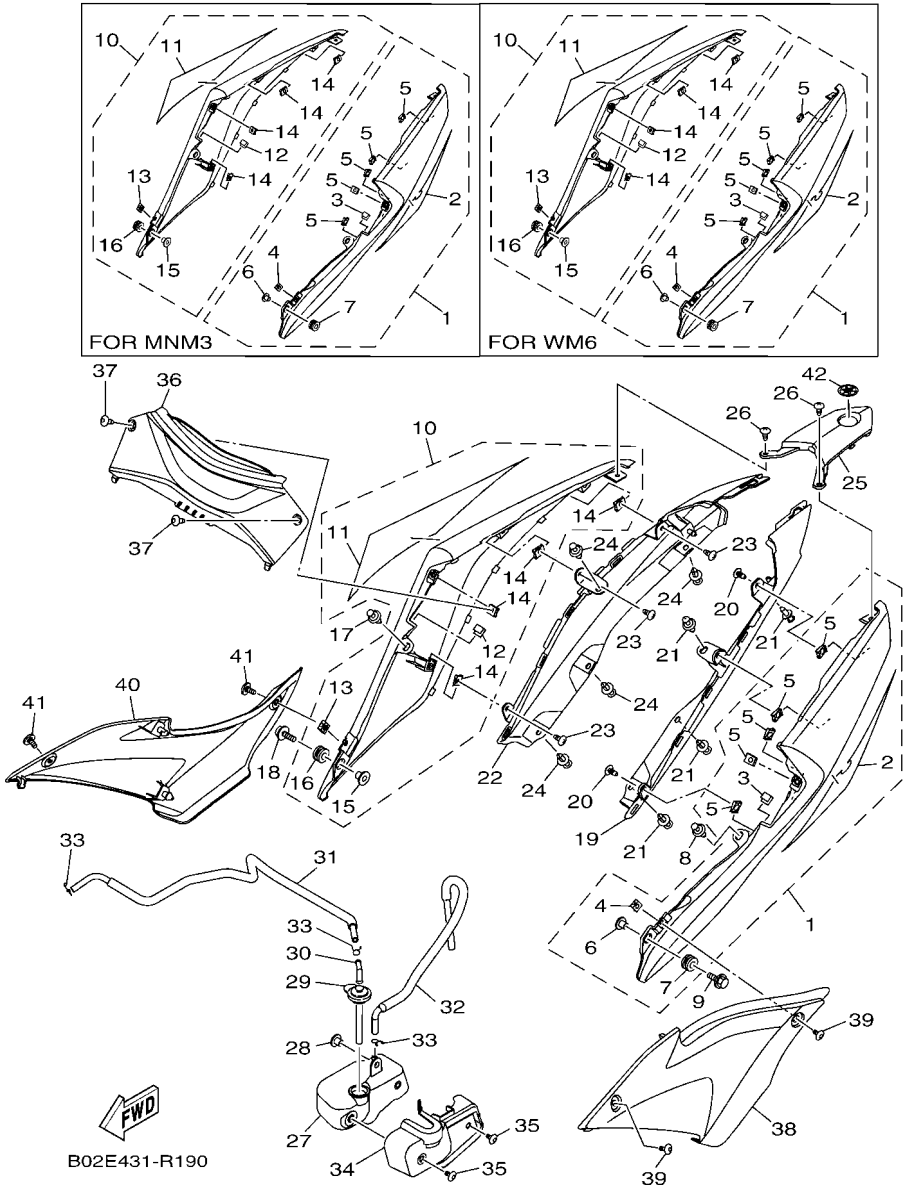

FIG. 19 CUBIERTA LATERAL — SIDE COVER

REF. Nº	CODIGO Nº PART NO.	DESCRIPCION DESCRIPTION	2YP6					OBSERVACIONES REMARKS
20	97707–50016	TORNILLO SCREW, TRUSS HEAD TAPPING	2					
21	90269–06081	REMACHE RIVET	4					
22	1WD–F171M–00	MUELLE, CUBIERTA LATERAL 2 MOLE, SIDE COVER 2	1					
23	97707–50016	TORNILLO SCREW, TRUSS HEAD TAPPING	3					
24	90269–06081	REMACHE RIVET	4					
25	1WD–F171N–00	MUELLE, CUBIERTA LATERAL 3 MOLE, SIDE COVER 3	1					
26	97707–50016	TORNILLO SCREW, TRUSS HEAD TAPPING	2					
27	1WD–F1871–00	TANQUE DE RECUPERACION TANK, RECOVERY	1					
28	90387–06857	ESPACIADOR COLLAR	1					
29	1WD–F1875–00	TAPA CAP	1					
30	3C1–F1828–00	CODO ELBOW	1					
31	1WD–F1816–00	TUBO 1 PIPE 1	1					
32	1WD–F1817–00	TUBO 2 PIPE 2	1					
33	90467–08003	PRESILLA CLIP	3					
34	1WD–F172W–00	CUBIERTA COVER	1					
35	90111–05003	TORNILLO BOLT,HEX. SOCKET BUTTON	2					
36	1WD–F1731–00–P1	TAPA LATERAL 3 COVER, SIDE 3	1					UR PARA DPBMC UR FOR DPBMC
	1WD–F1731–00–P5	TAPA LATERAL 3 COVER, SIDE 3	1					UR PARA MNM3 UR FOR MNM3
	1WD–F1731–00–P0	TAPA LATERAL 3 COVER, SIDE 3	1					UR SMX PARA WM6 UR SMX FOR WM6
37	90160–05810	TORNILLO REDONDO ROSCA HEMBRA SCREW, ROUND TAPPING	2					
38	1WD–F171E–00	CUBIERTA LATERAL 5 COVER, SIDE 5	1					
39	90111–05003	TORNILLO BOLT,HEX. SOCKET BUTTON	2					
40	1WD–F171X–00	CUBIERTA LATERAL 6 COVER, SIDE 6	1					
41	90111–05003	TORNILLO BOLT,HEX. SOCKET BUTTON	2					
42	1PA–F836B–00	MARCA TUNING FORK MARK	1					

FIG. 20 BRAZO TRASERO & SUSPENSION — REAR ARM & SUSPENSION

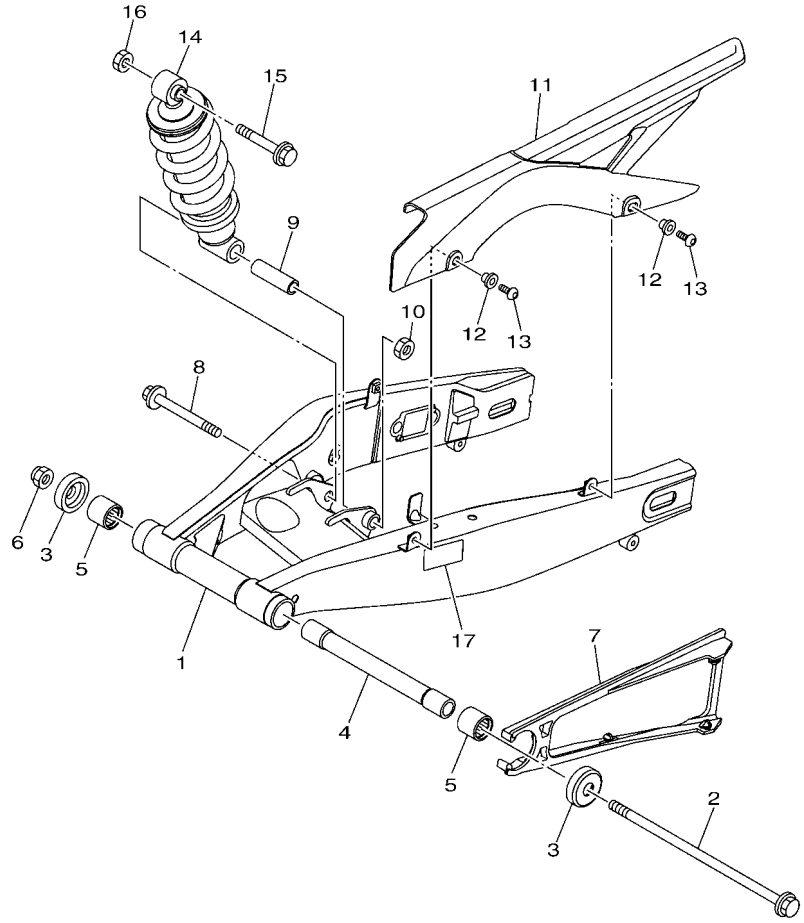

B026431-P200

REF. Nº	CODIGO Nº PART NO.	DESCRIPCION DESCRIPTION	2YP6					OBSERVACIONES REMARKS
1	1WD–F2110–00	BRAZO TRASERO COMPLETO REAR ARM COMP.	1					
2	1WD–22141–00	EJE DEL BARCULANTE SHAFT, PIVOT	1					
3	1WD–F2129–00	TAPA DE EMPUJE 2 COVER, THRUST 2	2					
4	1WD–F2184–00	BUJE BUSH	1					
5	93320–32403	COJINETE BEARING	2					
6	95602–14200	TUERCA DE AUTO-CIERRE NUT, SELF-LOCKING	1					
7	1WD–F2151–00	SELLO DE GUARDA SEAL, GUARD	1					
8	90105–12309	TORNILLO BOLT, FLANGE	1					
9	1WD–F248B–00	COLLAR,VARILLA 1 COLLAR, ROD 1	1					
10	95602–12100	TUERCA U NUT, U	1					
11	1WD–F2311–00	CABRECADENA CASE, CHAIN	1					
12	90387–06242	ESPACIADOR COLLAR	2					
13	90111–06119	TORNILLO BOLT,HEX. SOCKET BUTTON	2					
14	1WD–F2210–00	AMORTIGUADOR TRASERO COMPLETO SHOCK ABSORBER ASSY, REAR	1					
15	90105–12093	TORNILLO BOLT, FLANGE	1					
16	95602–12100	TUERCA U NUT, U	1					
17	2MS–F1668–00	ETIQUETA DE FRANJA LABEL, TIRE	1					

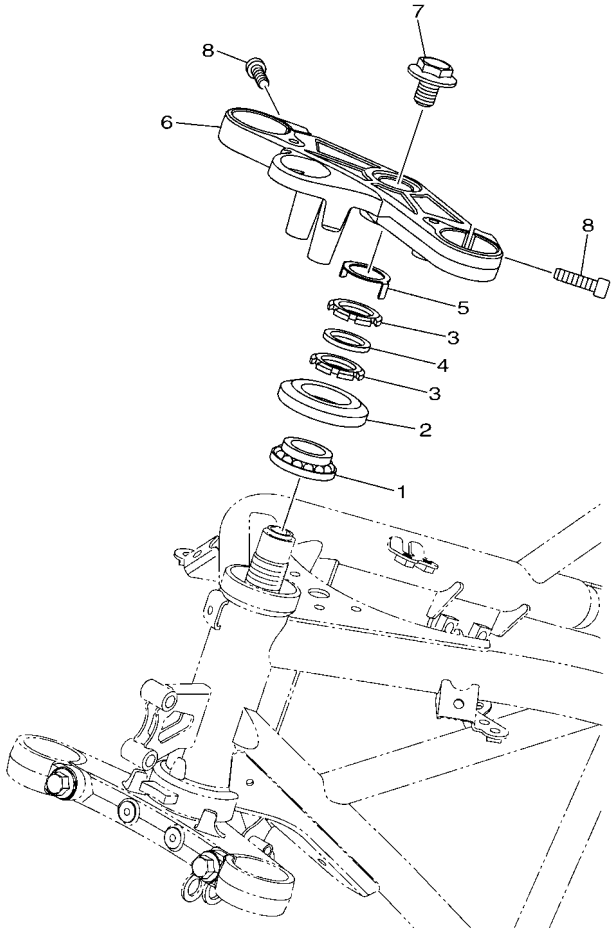

1WD1460-P210

FIG. 21 DIRECCION STEERING

REF. Nº	CODIGO Nº PART NO.	DESCRIPCION DESCRIPTION	2YP6					OBSERVACIONES REMARKS
1	93399–999Y3	COJINETE BEARING	1					
2	5BP–F3416–10	CUBIERTA DE BASE DE BOLA 2 COVER, BALL RACE 2	1					
3	90179–25615	TUERCA NUT	2					
4	90202–26142	ARANDELA DE PLANA WASHER, PLATE	1					
5	5BP–F3418–00	ARANDELA ESPECIAL WASHER, SPECIAL	1					
6	1WD–F3435–00	PLATINA SUPERIOR CROWN, HANDLE	1					
7	90105–14102	TORNILLO BOLT, FLANGE	1					
8	91317–08030	PERNO BOLT	2					

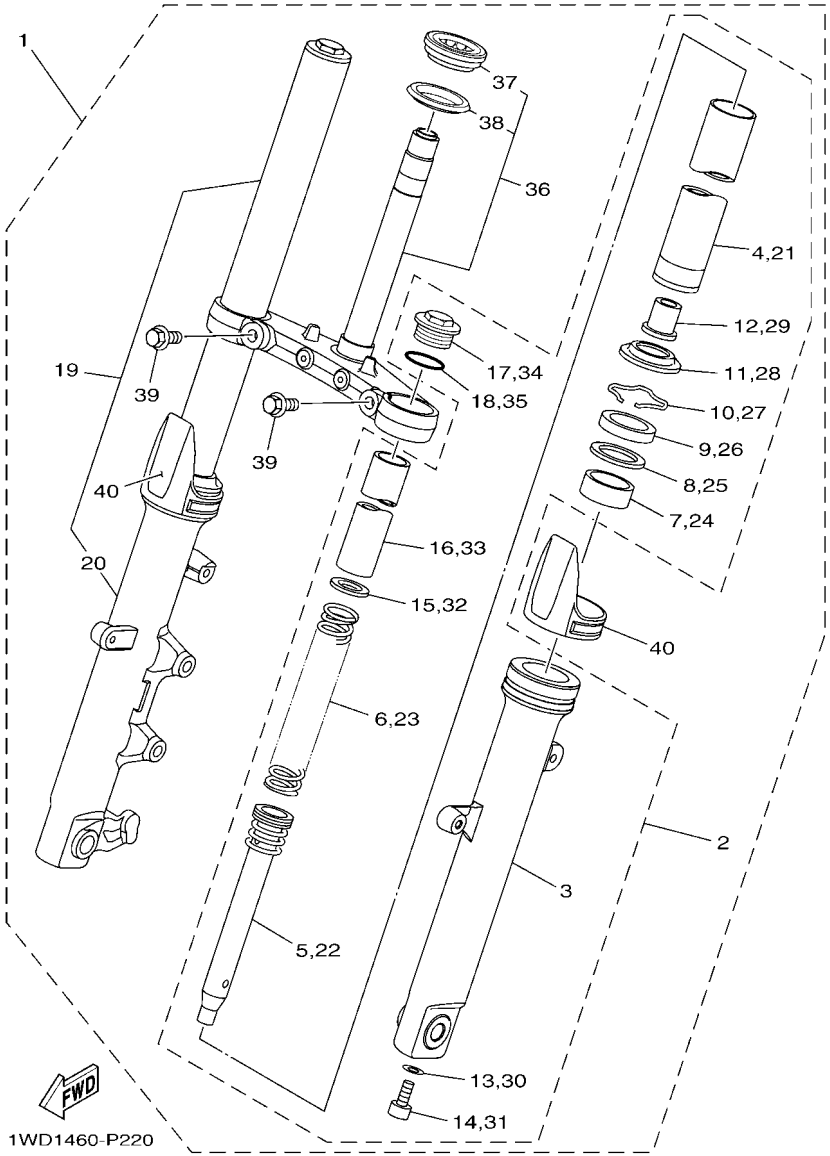

FIG. 22 HORQUILLA DELANTERA — FRONT FORK

REF. Nº	CODIGO Nº PART NO.	DESCRIPCION DESCRIPTION	2YP6					OBSERVACIONES REMARKS
1	1WD–F3100–00	HORQUILLA DELANTERA COMPLETA FRONT FORK ASSY	1					
2	1WD–F3102–00	.HORQUILLA DELANTERA COMPL.(MI) .FRONT FORK ASSY (L.H)	1					
3	1WD–F3126–00	..TUBO EXTERIOR (IZQUIERDO) ..TUBE, OUTER (L.H)	1					
4	1WD–F3110–00	..TUBO INTERIOR COMPLETO 1 ..INNER TUBE COMP.1	1					
5	1WD–F3170–00	..CILINDRO COMPL DE HORQ DELANT ..CYLINDER COMP., FRONT FORK	1					
6	1WD–F3141–00	..RESORTE HORQUILLA DELANT. ..SPRING, FRONT FORK	1					
7	45P–F3125–00	..METAL CORREDIZO 1 ..METAL, SLIDE 1	1					
8	45P–F3146–00	..ARANDELA DE SELLO DE ACEITE ..WASHER, OIL SEAL	1					
9	45P–F3145–00	..RETEN DE ACEITE ..OIL SEAL	1					
10	45P–F3156–00	..ANILLO DE ENGANCHE ..RING, SNAP	1					
11	45P–F3144–00	..GUARDAPOLVO ..SEAL, DUST	1					
12	1WD–F3173–00	..VASTAGO AHUSADO ..SPINDLE, TAPER	1					
13	509–F3158–L0	..EMPAQUE ..GASKET	1					
14	31B–F3181–00	..TORNILLO CABEZAHEXAGONAL ..BOLT, HEXAGON SOCKET HEAD	1					
15	45P–F3149–00	..ARANDELA DE RESORTE SUPERIOR ..WASHER, SPRING UPPER	1					
16	1WD–F3118–00	..SEPARADOR ..SPACER	1					
17	45P–F3111–00	..PERNO DE TAPA ..BOLT, CAP	1					
18	45P–F3188–00	..ANILLO O ..O-RING	1					
19	1WD–F3103–00	.HORQUILLA DELANTERA COMPL.(MD) .FRONT FORK ASSY (R.H)	1					
20	1WD–F3136–00	..TUBO EXTERIOR 2 ..TUBE, OUTER 2	1					
21	1WD–F3110–00	..TUBO INTERIOR COMPLETO 1 ..INNER TUBE COMP.1	1					
22	1WD–F3170–00	..CILINDRO COMPL DE HORQ DELANT ..CYLINDER COMP., FRONT FORK	1					
23	1WD–F3141–00	..RESORTE HORQUILLA DELANT. ..SPRING, FRONT FORK	1					
24	45P–F3125–00	..METAL CORREDIZO 1 ..METAL, SLIDE 1	1					
25	45P–F3146–00	..ARANDELA DE SELLO DE ACEITE ..WASHER, OIL SEAL	1					
26	45P–F3145–00	..RETEN DE ACEITE ..OIL SEAL	1					
27	45P–F3156–00	..ANILLO DE ENGANCHE ..RING, SNAP	1					

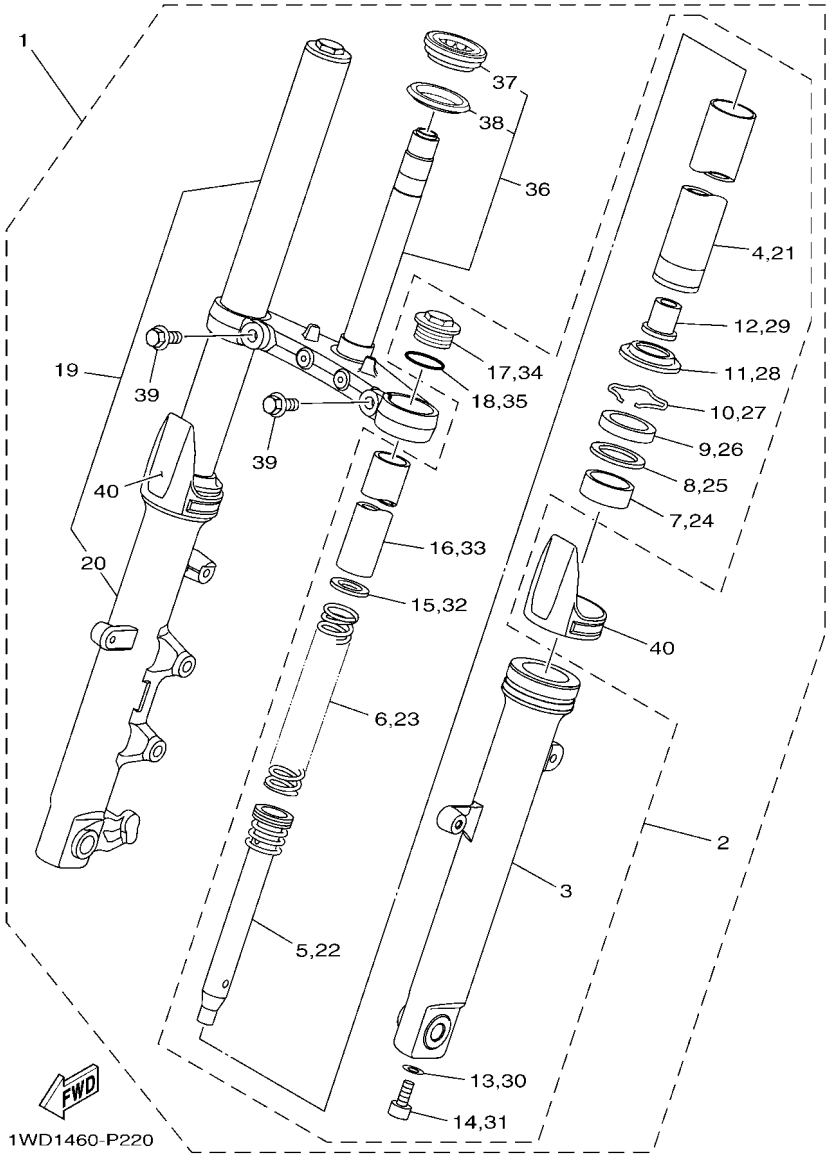

FIG. 22 HORQUILLA DELANTERA — FRONT FORK

REF. Nº	CODIGO Nº PART NO.	DESCRIPCION DESCRIPTION	2YP6					OBSERVACIONES REMARKS
28	45P–F3144–00	..GUARDAPOLVO ..SEAL, DUST	1					
29	1WD–F3173–00	..VASTAGO AHUSADO ..SPINDLE, TAPER	1					
30	509–F3158–L0	..EMPAQUE ..GASKET	1					
31	31B–F3181–00	..TORNILLO CABEZAHEXAGONAL ..BOLT, HEXAGON SOCKET HEAD	1					
32	45P–F3149–00	..ARANDELA DE RESORTE SUPERIOR ..WASHER, SPRING UPPER	1					
33	1WD–F3118–00	..SEPARADOR ..SPACER	1					
34	45P–F3111–00	..PERNO DE TAPA ..BOLT, CAP	1					
35	45P–F3188–00	..ANILLO O ..O-RING	1					
36	1WD–F3340–00	.PLATINA INFERIOR COMPLETA .UNDER BRACKET COMP.	1					
37	93399–99932	..COJINETE ..BEARING	1					
38	3FV–23462–00	..SELLO PARA POLVO ..SEAL, STEERING	1					
39	45P–F3346–00	.PERNO 1 .BOLT 1	2					
40	1WS–2331G–00	.CUBIERTA .COVER	2					

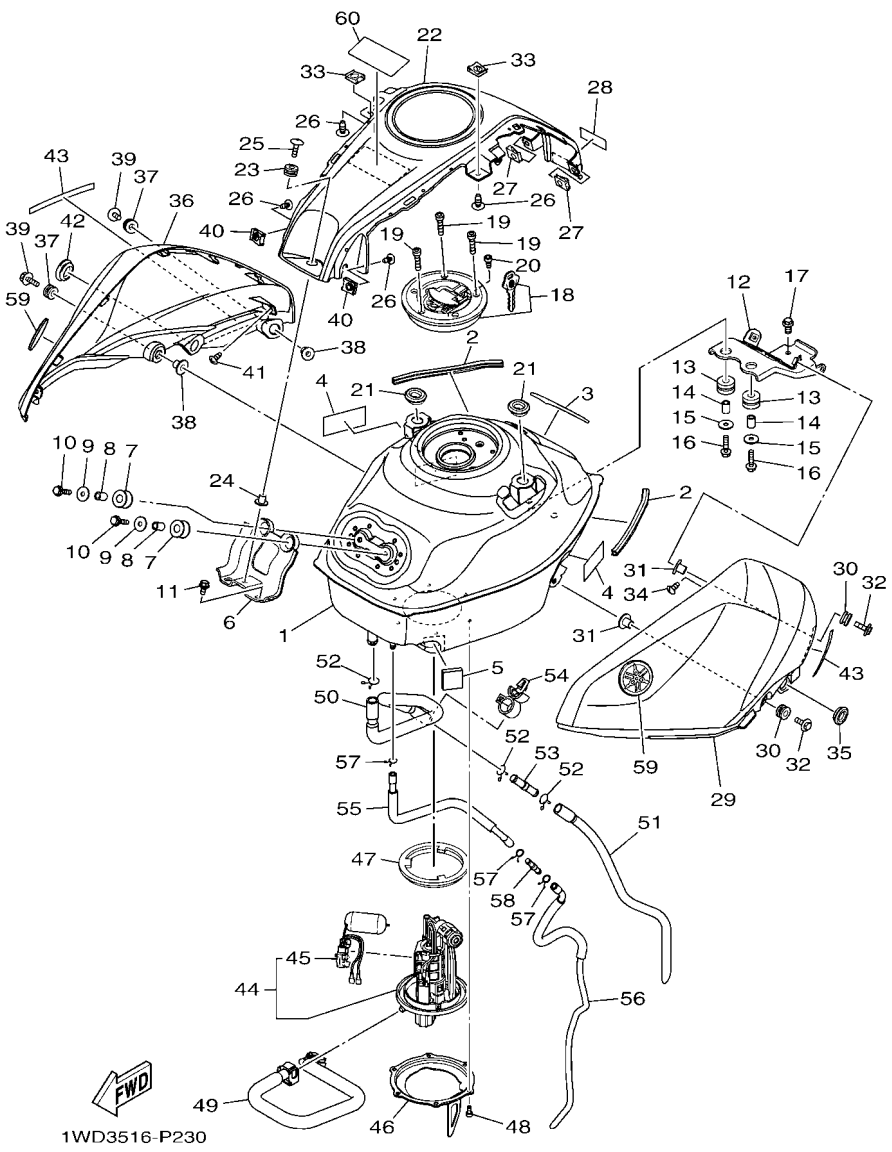

FIG. 23 DEPOSITO DE COMBUSTIBLE — FUEL TANK

REF. Nº	CODIGO Nº PART NO.	DESCRIPCION DESCRIPTION	2YP6					OBSERVACIONES REMARKS
1	1WD–F4110–00	DEPOSITO DE COMBUSTIBLE COMP. FUEL TANK COMP.	1					
2	1WD–F4188–00	MOLDURA DEPOSITO COMBUST. MOLD, FUEL TANK	2					
3	90520–03823	EQUILIBRIO, CUBIERTA DAMPER, PLATE	1					
4	5D9–F414G–00	SELLO SEAL	2					
5	45P–F414H–00	EQUILIBRIO, CUBIERTA DAMPER, PLATE 1	1					
6	1WD–F412Y–00	SOPORTE TANK ELEQUIPO BRACKET, TANK FITTING	1					
7	1WD–F4339–00	ANILLO PROTECTOR GROMMET	2					
8	90387–06299	ESPACIADOR COLLAR	2					
9	90201–06380	ARANDELA PLANA WASHER PLAIN	2					
10	95822–06025	TORNILLO DE REBORDE BOLT, FLANGE	2					
11	95812–06012	TORNILLO DE REBORDE BOLT, FLANGE	2					
12	1WD–F4191–00	SOPORTE DEPOSITO DE COMBUST.1 BRACKET, FUEL TANK 1	1					
13	90480–15807	TAPON GROMMET	2					
14	90387–06299	ESPACIADOR COLLAR	2					
15	90201–06380	ARANDELA PLANA WASHER PLAIN	2					
16	95822–06025	TORNILLO DE REBORDE BOLT, FLANGE	2					
17	95022–08014	PERNO, DE BRIDA BOLT, FLANGE	2					
18	1WD–WF461–00	TAPON DEPOSITO COMPLETO CAP ASSY	1					
19	90110–05806	TORNILLO ALLEN BOLT, HEXAGON SOCKET HEAD	3					
20	91312–05010	TORNILLO BOLT	1					
21	90480–01558	TAPON GROMMET	2					
22	1WD–F41B1–00–P1	TAPA DE TANQUE COVER, TANK	1					MS1 PARA DPBMC MS1 FOR DPBMC
	1WD–F41B1–00–P3	TAPA DE TANQUE COVER, TANK	1					SMX PARA MNM3,WM6 SMX FOR MNM3,WM6
23	90480–12808	TAPON GROMMET	1					
24	90387–06899	ESPACIADOR COLLAR	1					
25	90111–06117	TORNILLO BOLT,HEX. SOCKET BUTTON	1					
26	97707–50012	TORNILLO SCREW, TRUSS HEAD TAPPING	4					

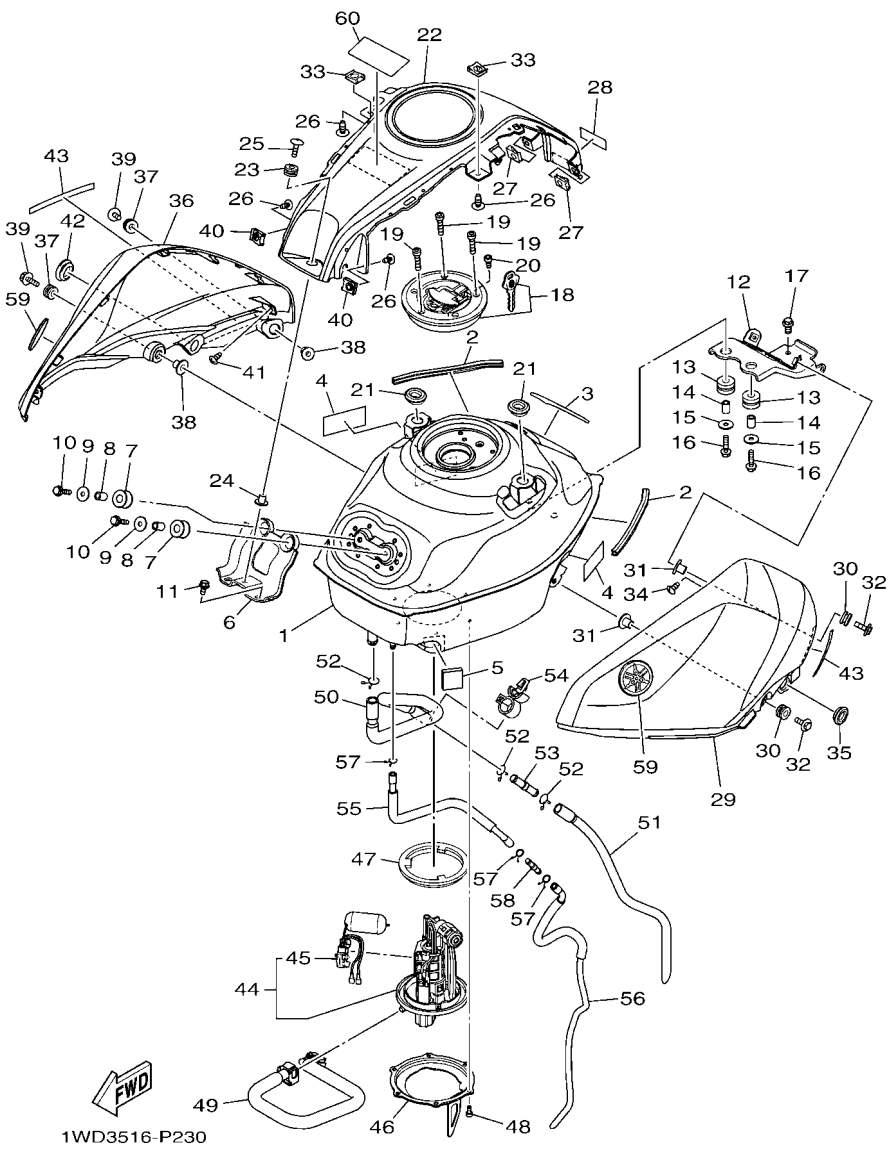

FIG. 23 DEPOSITO DE COMBUSTIBLE — FUEL TANK

REF. Nº	CODIGO Nº PART NO.	DESCRIPCION DESCRIPTION	2YP6					OBSERVACIONES REMARKS
27	90183–05807	TUERCA DE RESORTE NUT, SPRING	2					
28	1WD–F414G–00	SELLO SEAL	1					
29	1WD–F4129–00–P1	CUBIERTA LATERAL 1 COVER, SIDE 1	1					UR PARA DPBMC UR FOR DPBMC
	1WD–F4129–00–P4	CUBIERTA LATERAL 1 COVER, SIDE 1	1					UR PARA MNM3 UR FOR MNM3
	1WD–F4129–00–P3	CUBIERTA LATERAL 1 COVER, SIDE 1	1					UR PARA WM6 UR FOR WM6
30	90480–12808	TAPON GROMMET	2					
31	90387–06899	ESPACIADOR COLLAR	2					
32	90119–05020	TORNILLO CON ARANDELA BOLT, WITH WASHER	2					
33	90183–05807	TUERCA DE RESORTE NUT, SPRING	2					
34	97707–50012	TORNILLO SCREW, TRUSS HEAD TAPPING	1					
35	90480–01559	TAPON GROMMET	1					
36	1WD–F4139–00–P1	CUBIERTA LATERAL 2 COVER, SIDE 2	1					UR PARA DPBMC UR FOR DPBMC
	1WD–F4139–00–P4	CUBIERTA LATERAL 2 COVER, SIDE 2	1					UR PARA MNM3 UR FOR MNM3
	1WD–F4139–00–P3	CUBIERTA LATERAL 2 COVER, SIDE 2	1					UR PARA WM6 UR FOR WM6
37	90480–12808	TAPON GROMMET	2					
38	90387–06899	ESPACIADOR COLLAR	2					
39	90119–05020	TORNILLO CON ARANDELA BOLT, WITH WASHER	2					
40	90183–05807	TUERCA DE RESORTE NUT, SPRING	2					
41	97707–50012	TORNILLO SCREW, TRUSS HEAD TAPPING	1					
42	90480–01559	TAPON GROMMET	1					
43	1WD–F414E–00	SELLO 2 SEAL 2	2					
44	1WD–E3907–00	BOMBA DE COMBUSTIBLE COMPLETA FUEL PUMP COMP.	1					
45	1WD–H5752–00	.UNIDAD TRANSM. MED. COMBUST. .SENDER UNIT ASSY, FUEL METER	1					
46	1WD–F4491–00	SOPORTE BOMBA COMBUSTIBLE BRACKET, FUEL PUMP	1					
47	3C1–F4486–00	ANILLO O O-RING	1					
48	91312–05010	TORNILLO BOLT	6					
49	1WD–E3971–00	ANILLO DE ESPACIADOR PIPE, FUEL 1	1					

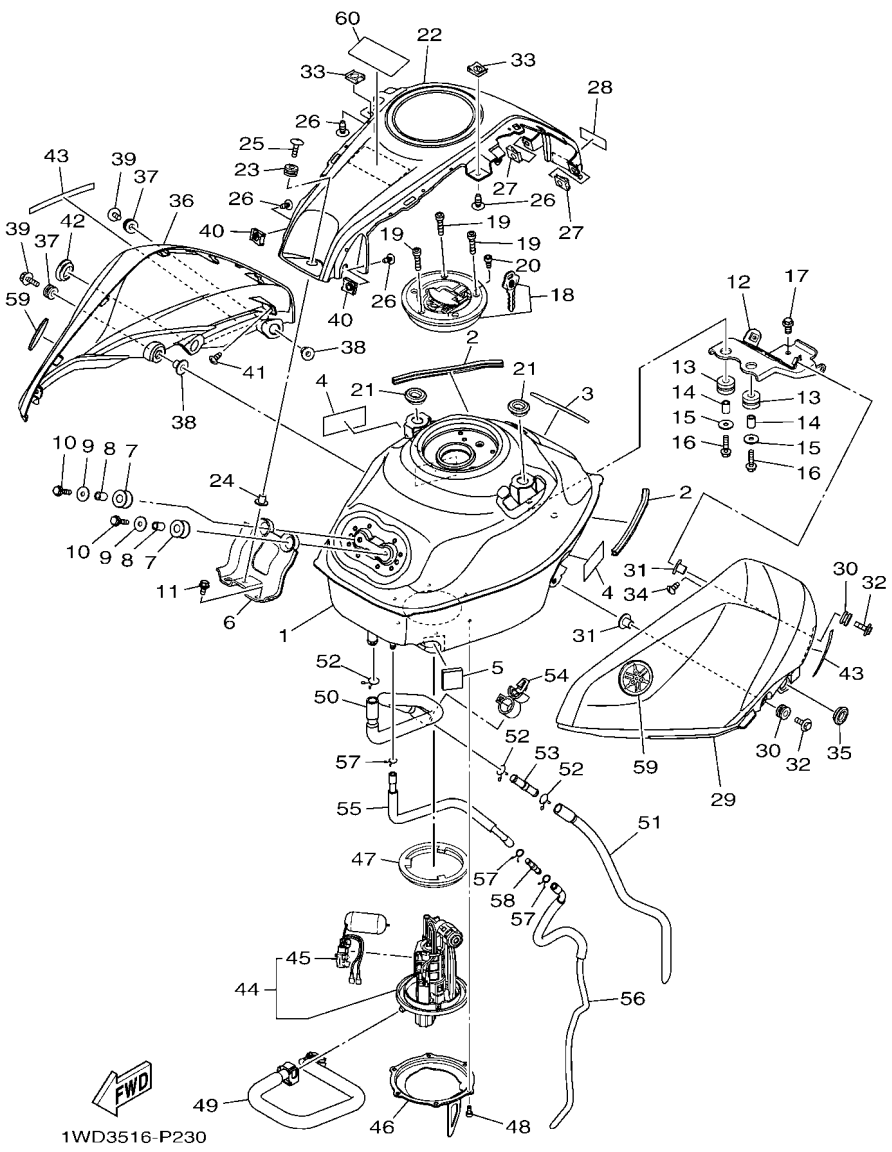

FIG. 23 DEPOSITO DE COMBUSTIBLE — FUEL TANK

REF. Nº	CODIGO Nº PART NO.	DESCRIPCION DESCRIPTION	2YP6					OBSERVACIONES REMARKS
50	1WD–F4312–00	TUBO 2 PIPE 2	1					
51	1WD–F4314–00	TUBO 4 PIPE 4	1					
52	90467–15012	PRESILLA CLIP	3					
53	1WD–F4376–00	TUBO DE UNION 1 PIPE, JOINT 1	1					
54	90464–16012	BRIDA CLAMP	1					
55	1WD–F4313–01	TUBO 3 PIPE 3	1					
56	1WD–F4315–00	TUBO DE DESAGUE PIPE 5	1					
57	90467–09006	PRESILLA CLIP	3					
58	4XY–14568–00	UNION JOINT	1					
59	1WD–F413B–00	EMBLEMA EMBLEM	2					
60	26P–21568–10	ETIQUETA DE PRECAUCION LABEL, WARNING	1					

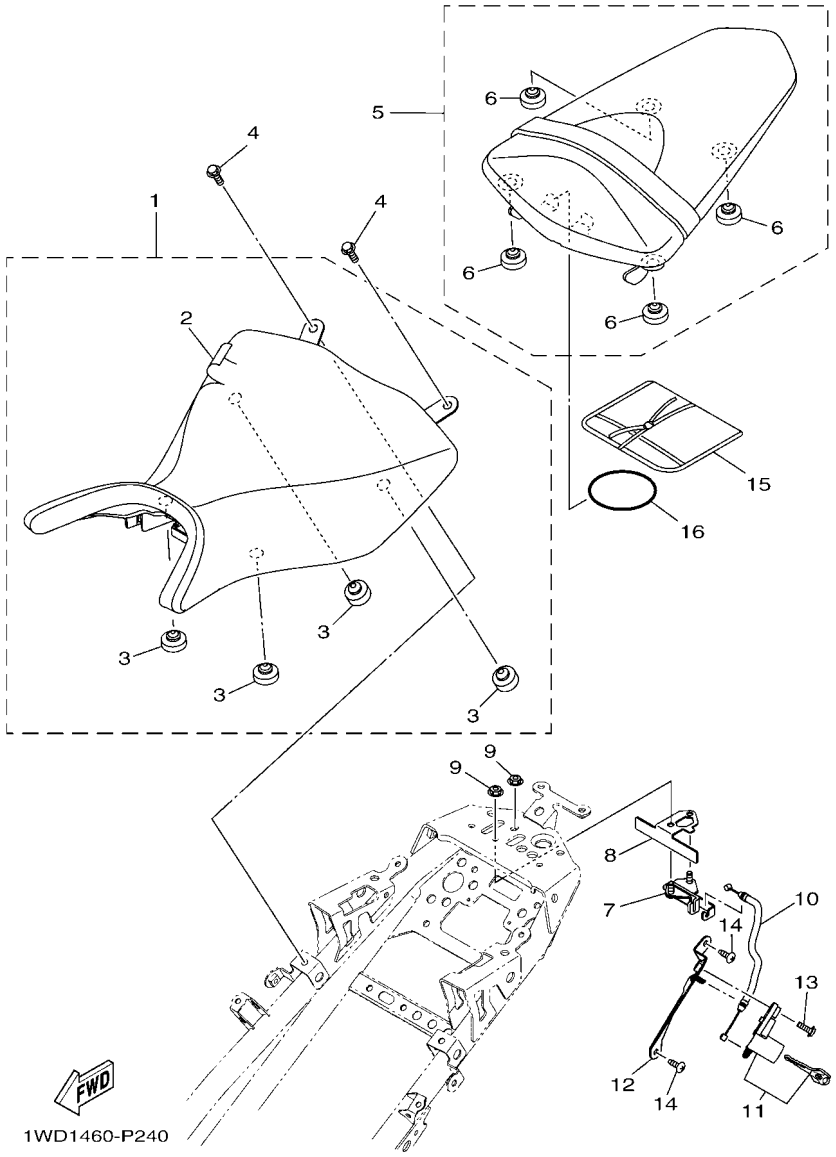

FIG. 24 ASIENTO — SEAT

REF. Nº	CODIGO Nº PART NO.	DESCRIPCION DESCRIPTION	2YP6					OBSERVACIONES REMARKS
1	1WD–F4710–01	ASIENTO SIMPLE COMPLETO SINGLE SEAT ASSY	1					
2	1WD–F4711–00	.CUBIERTA DE ASIENTO SIMPLE .COVER, SINGLE SEAT	1					
3	5BP–F4741–00	.COJIN DE ASIENTO .PAD, SEAT	4					
4	95022–06012	PERNO, DE BRIDA BOLT, FLANGE	2					
5	1WD–F4750–00	ASIENTO TANDEM COMPLETO TANDEM SEAT ASSY	1					
6	3C1–F4741–00	.COJIN DE ASIENTO .PAD, SEAT	4					
7	1WD–F4780–00	CERRADURA SILLIN COMPLETO SEAT LOCK ASSY	1					
8	1WD–F4792–00	PLACA PLATE	1					
9	95707–06500	TUERCA DE BRIDA NUT, FLANGE	2					
10	1WD–F478E–00	CABLE CABLE, SEAT LOCK	1					
11	1WD–WF479–00	CUBIERTA, DE COLA ROTOR SUB ASSY WITH KEY	1					
12	1WD–F117K–00	SOPORTE DE CERRADURA STAY, LOCK	1					
13	90159–06054	TORNILLO CON VALONA SCREW, WITH WASHER	1					
14	97702–50016	TORNILLO ROSCA HEMBRA SCREW, TAPPING	2					
15	1WD–F8100–00	JUEGO DE HERRAMIENTAS TOOL KIT	1					
16	5TL–H2131–00	TIRANTE DE BATERIA BAND, BATTERY	1					

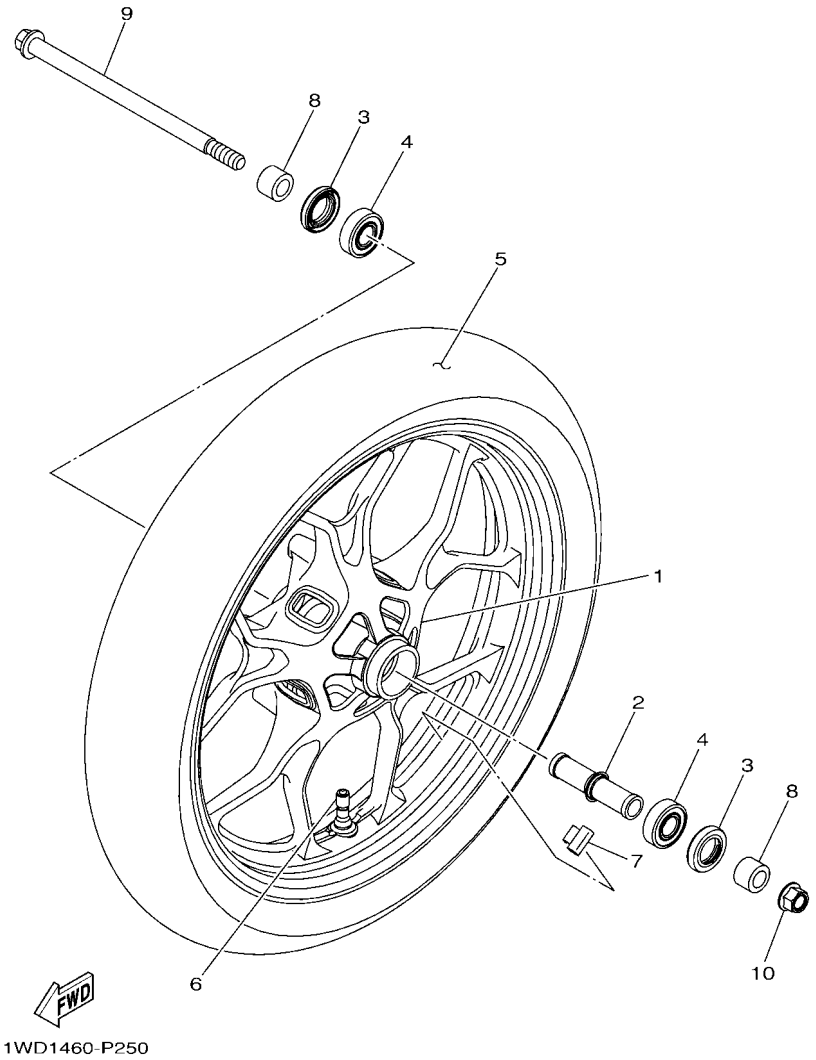

FIG. 25 RUEDA DELANTERA — FRONT WHEEL

REF. Nº	CODIGO Nº PART NO.	DESCRIPCION DESCRIPTION	2YP6					OBSERVACIONES REMARKS
1	1WD–F5168–01–P0	RUEDA FUNDIDA DELANTERA CAST WHEEL, FRONT	1					DPBM15 PARA A DPBM15 FOR A
	1WD–F5168–01–0X	RUEDA FUNDIDA DELANTERA CAST WHEEL, FRONT	1					LGB/DRSC PARA B,C LGB/DRSC FOR B,C
2	1WD–F510C–00	COLLAR COLLAR ASSY.	1					
3	93106–26815	SELLO ACEITE OIL SEAL	2					
4	93306–302X4	COJINETE BEARING	2					
5	*	NEUMATICO (110/70-17 M/C 54H) TIRE (110/70-17 M/C 54H)	1					LM MICHELIN LM MICHELIN
6	93900–00828	VALVULA VALVE, RIM	1					
7	5MT–25398–00	BALANCEADOR DE RUEDA (10G) BALANCER, WHEEL (10G)	1					UN UN
	5MT–25398–10	BALANCEADOR DE RUEDA (20G) BALANCER, WHEEL (20G)	1					UN UN
	5MT–25398–20	BALANCEADOR DE RUEDA (30G) BALANCER, WHEEL (30G)	1					UN UN
8	1PA–F5386–00	COLLAR EJE DE RUEDA DENTADA COLLAR, SPROCKET AXLE	2					
9	1WD–25181–00	EJE DE LA RUEDA AXLE, WHEEL	1					
10	95602–14200	TUERCA DE AUTO-CIERRE NUT, SELF-LOCKING	1					

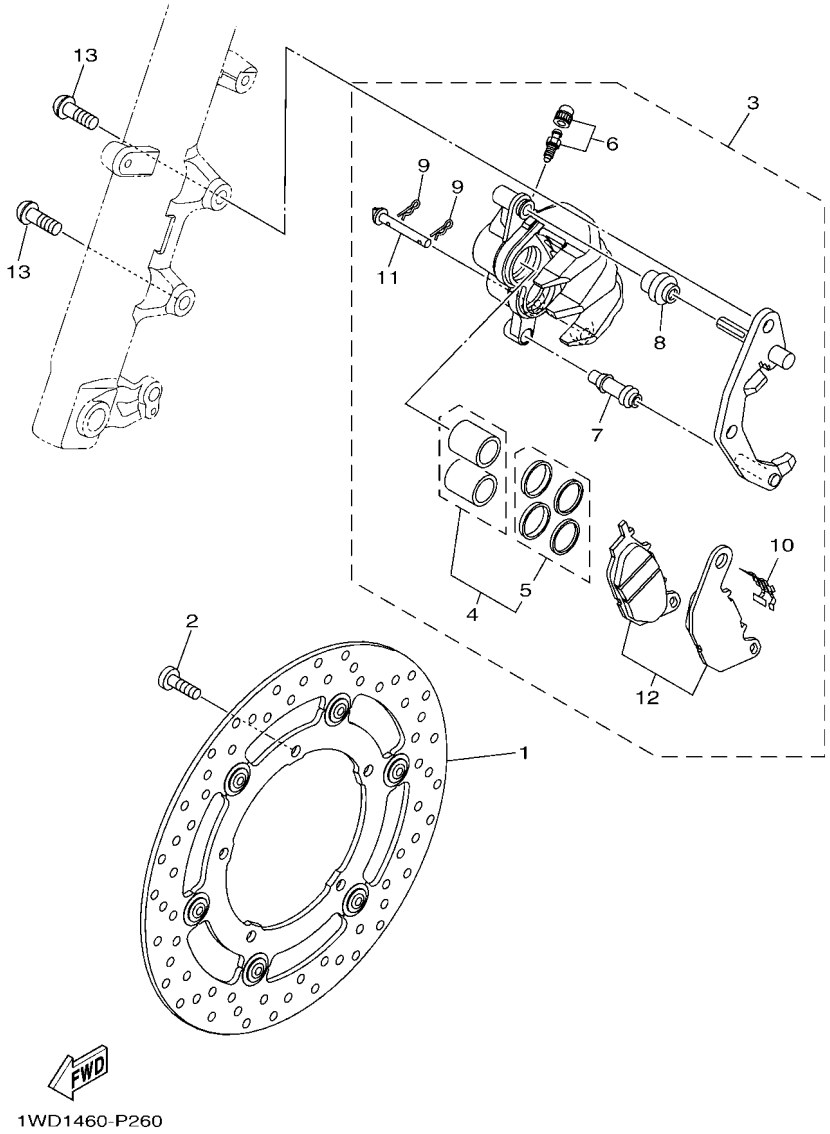

FIG. 26 CALIBRE FRENO DELANTERA — FRONT BRAKE CALIPER

REF. Nº	CODIGO Nº PART NO.	DESCRIPCION DESCRIPTION	2YP6					OBSERVACIONES REMARKS
1	1WD–F581U–00	DISCO DE FRENO (DERECO) DISK BRAKE ASSY (RIGHT)	1					
2	90111–08815	TORNILLO BOLT,HEX. SOCKET BUTTON	5					
3	1WD–F580U–01	CALIBRE COMPLETO (DERECHO) CALIPER ASSY (RIGHT)	1					
4	1WD–25802–00	.PISTON COMPLETO PINZA .PISTON ASSY, CALIPER	1					
5	1WD–25803–00	..JUEGO DE RETENES DE PINZA ..CALIPER SEAL KIT	1					
6	4C9–W0048–00	.CJTO TORNILLO DE PURGA .BLEED SCREW KIT	1					
7	5YP–F5937–00	.FUNDA .BOOT 2	1					
8	5YP–F5917–00	.FUNDA DE CALIBRE .BOOT, CALIPER	1					
9	5YP–F5925–01	.PRESILLA .CLIP	2					
10	1WD–F5919–00	.SOPORTE DE PASTILLAS .SUPPORT, PAD	1					
11	5YP–F5924–00	.PASADOR .PIN, PAD	1					
12	1WD–25805–00	.JUEGO DE COJIN DE FRENO .BRAKE PAD KIT	1					
13	90149–10804	TORNILLO DE REGLAJE SCREW	2					

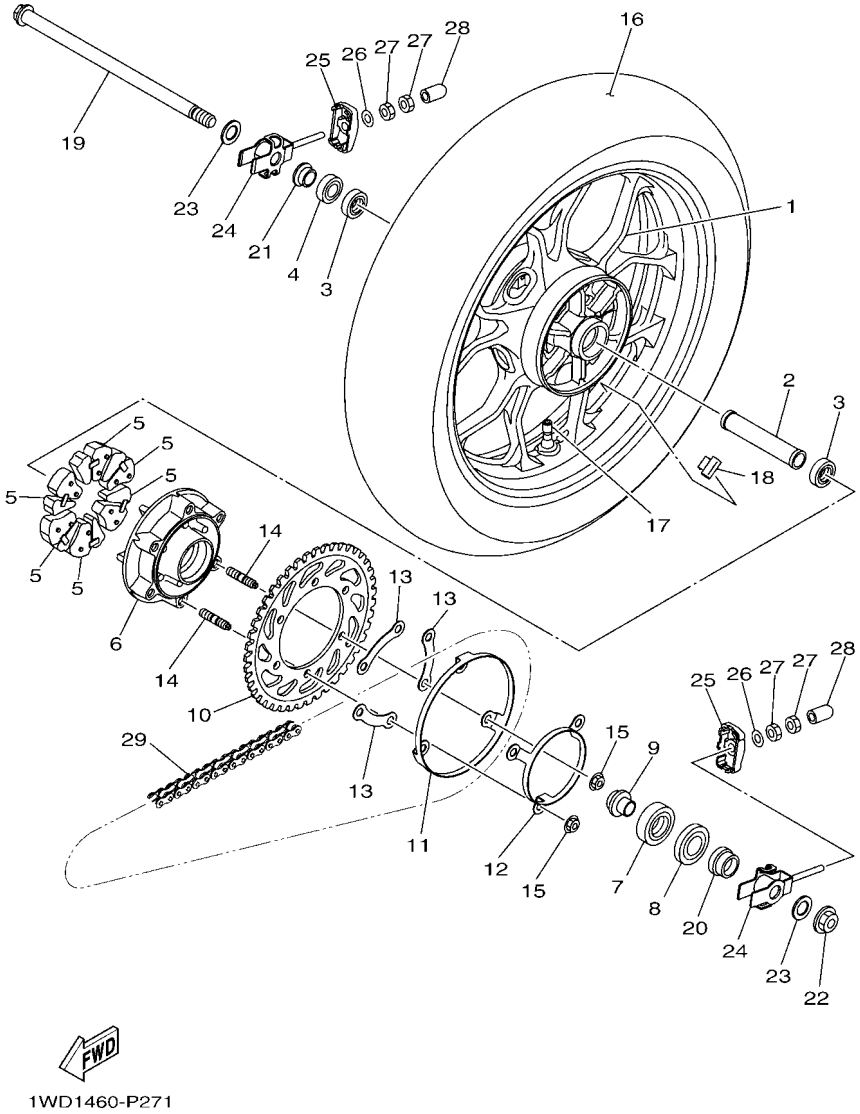

FIG. 27 RUEDA TRASERA — REAR WHEEL

REF. Nº	CODIGO Nº PART NO.	DESCRIPCION DESCRIPTION	2YP6					OBSERVACIONES REMARKS
1	1WD–F5338–01–P0	RUEDA FUNDIDA TRASERA CAST WHEEL, REAR	1					DPBM15 PARA A DPBM15 FOR A
	1WD–F5338–01–0X	RUEDA FUNDIDA TRASERA CAST WHEEL, REAR	1					LGB/DRSC PARA B,C LGB/DRSC FOR B,C
2	90387–17810	ESPACIADOR COLLAR	1					
3	93306–20314	COJINETE BEARING	2					
4	93106–23002	SELLO ACEITE OIL SEAL	1					
5	1WD–F5364–00	AMORTIGUADOR DAMPER	6					
6	1WD–F5366–00–P0	EMBRAGUE DE MASA CLUTCH, HUB	1					PARA DPBMC FOR DPBMC
	1WD–F5366–00–98	EMBRAGUE DE MASA CLUTCH, HUB	1					LGB PARA MNM3,WM6 LGB FOR MNM3,WM6
7	93306–30450	COJINETE BEARING	1					
8	93106–38046	SELLO ACEITE OIL SEAL	1					
9	1WD–F5377–00	COLLAR DE RUEDA COLLAR, WHEEL	1					
10	1WD–F5443–00	CORONA (43T) SPROCKET, DRIVEN (43T)	1					
11	1WD–F537W–00	SOPORTE 1 BRACKET 1	1					
12	1WD–F537X–00	SOPORTE 2 BRKT 2	1					
13	1WD–F539F–00	PLACA 1 PLATE 1	3					
14	90116–10065	ESPARRAGO BOLT, STUD	6					
15	95602–10200	TUERCA DE AUTO-CIERRE NUT, U FLANGE	6					
16	*	NEUMATICO (140/70-17 M/C 66H) TIRE (140/70-17 M/C 66H)	1					LM MICHELIN LM MICHELIN
17	93900–00828	VALVULA VALVE, RIM	1					
18	5MT–25398–00	BALANCEADOR DE RUEDA (10G) BALANCER, WHEEL (10G)	1					UN UN
	5MT–25398–10	BALANCEADOR DE RUEDA (20G) BALANCER, WHEEL (20G)	1					UN UN
	5MT–25398–20	BALANCEADOR DE RUEDA (30G) BALANCER, WHEEL (30G)	1					UN UN
19	1WD–25381–00	EJE DE RUEDA AXLE, WHEEL	1					
20	1WD–F5386–00	COLLAR EJE DE RUEDA DENTADA COLLAR, SPROCKET AXLE	1					
21	1WD–F5383–00	COLLAR DE RUEDA COLLAR, WHEEL	1					
22	95602–16200	TUERCA DE AUTO-CIERRE NUT, SELF-LOCKING	1					
23	90201–17809	ARANDELA PLANA WASHER, PLATE	2					

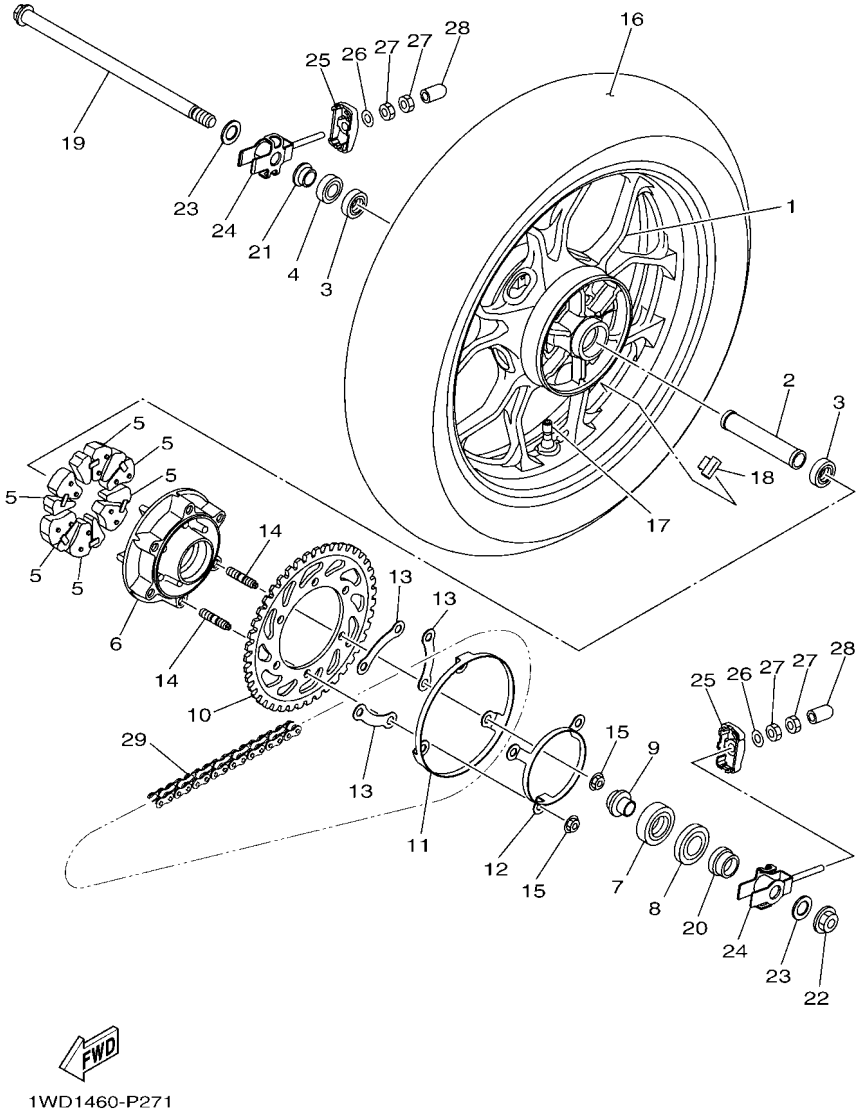

FIG. 27 RUEDA TRASERA — REAR WHEEL

REF. Nº	CODIGO Nº PART NO.	DESCRIPCION DESCRIPTION	2YP6					OBSERVACIONES REMARKS
24	1WD–F5388–00	TIRADOR DE CADENA 1 PULLER, CHAIN 1	2					
25	1WD–F2174–00	EXTREMO 1 END 1	2					
26	92902–08600	ARANDELA WASHER, PLATE	2					
27	95302–08600	TUERCA NUT, HEXAGON	4					
28	40D–E443G–00	TUBO, DRENAJE 2 PIPE, DRAIN 2	2					
29	94568–H3112	CADENA (DID520VF 112LE) CHAIN (DID520VF 112LE)	1					

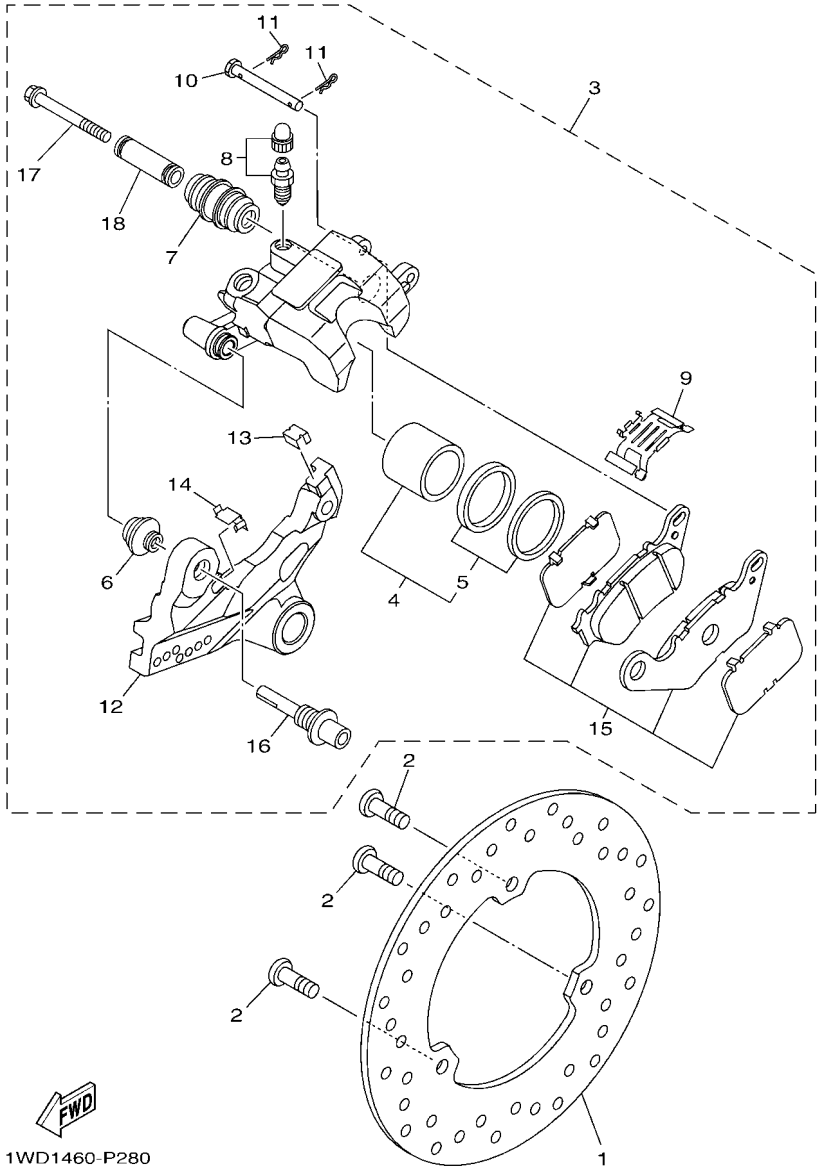

FIG. 28 CALIBRE FRENO TRASERA — REAR BRAKE CALIPER

REF. Nº	CODIGO Nº PART NO.	DESCRIPCION DESCRIPTION	2YP6					OBSERVACIONES REMARKS
1	1WD–F582W–00	DISCO DE FRENO TRASEROS 2 DISK, REAR BRAKE 2	1					
2	90111–08815	TORNILLO BOLT,HEX. SOCKET BUTTON	3					
3	1WD–F580W–01	CALIBRE COMPLETO TRASEROS 2 CALIPER ASSY, REAR 2	1					
4	1WD–25802–50	.PISTON COMPLETO PINZA .PISTON ASSY, CALIPER	1					
5	1WD–25803–50	..JUEGO DE RETENES DE PINZA ..CALIPER SEAL KIT	1					
6	5YP–F5917–00	.FUNDA DE CALIBRE .BOOT, CALIPER	1					
7	34X–25937–00	.FUNDA .BOOT 2	1					
8	5YP–W0048–50	.CJTO TORNILLO DE PURGA .BLEED SCREW KIT	1					
9	1WD–F5919–50	.SOPORTE DE PASTILLAS .SUPPORT, PAD	1					
10	1WD–F5924–50	.PASADOR .PIN, PAD	1					
11	5YP–F5925–01	.PRESILLA .CLIP	2					
12	1WD–F5921–51	.MENSULA DE SOPORTE .BRACKET, SUPPORT	1					
13	1WD–F5939–51	.PRESILLA .CLIP, PAD	1					
14	1WD–F5939–61	.PRESILLA .CLIP, PAD	1					
15	1WD–25806–00	.JUEGO DE PASTILLAS DE FRENO 2 .BRAKE PAD KIT 2	1					
16	1WD–F5914–50	.PASADOR .PIN, SLIDE	1					
17	5KN–25926–01	.PERNO .BOLT	1					
18	5TL–F5838–00	.CASQUILLO DE CALIBRE .SLEEVE, CALIPER	1					

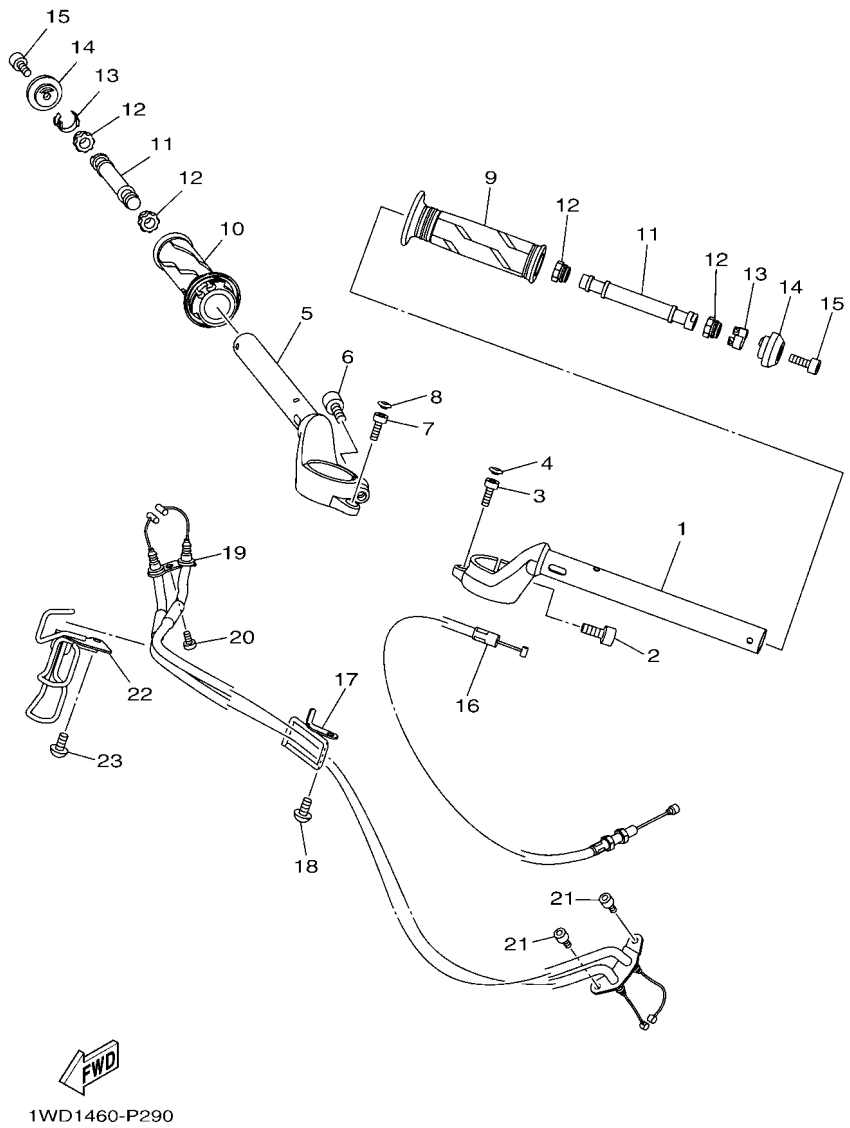

FIG. 29 MANILLAR & CABLE — STEERING HANDLE & CABLE

REF. Nº	CODIGO Nº PART NO.	DESCRIPCION DESCRIPTION	2YP6					OBSERVACIONES REMARKS
1	1WD–F6121–01	MANUBRIO (MI) HANDLEBAR (LEFT)	1					
2	91317–08020	PERNO BOLT	1					
3	91317–06016	PERNO BOLT	1					
4	90338–05010	TAPON PLUG	1					
5	1WD–F6122–00	MANUBRIO (MD) HANDLEBAR (RIGHT)	1					
6	91317–08020	PERNO BOLT	1					
7	91317–06016	PERNO BOLT	1					
8	90338–05010	TAPON PLUG	1					
9	2DP–F6241–00	EMPUNADURA GRIP	1					
10	1WD–F6240–00	EMPUNADURA COMPLETA GRIP ASSY	1					
11	2MS–F622H–00	CONTRAPESO WEIGHT	2					
12	1S7–F622F–00	AMORTIGUADOR, DE UBICACION 1 DAMPER, LOCATING 1	4					
13	1S7–F6257–00	TOPE STOPPER	2					
14	1WD–F6246–00	EXTREMO DE EMPUNADURA END, GRIP	2					
15	91317–06020	PERNO BOLT	2					
16	1WD–F6335–00	CABLE DE EMBRAGUE CABLE, CLUTCH	1					
17	1WD–F6131–00	GUIA DE CABLE 1 GUIDE, CABLE 1	1					
18	92012–06012	PERNO BOLT, BUTTON HEAD	1					
19	1WD–F6301–00	CABLE DE ACELERADOR COMPLETO THROTTLE CABLE ASSY	1					
20	98507–05012	TORNILLO DE CABEZA PLANA SCREW, PAN HEAD	1					
21	91312–05010	TORNILLO BOLT	2					
22	1WD–F6132–00	GUIA DE CABLE 2 GUIDE, CABLE 2	1					
23	92012–06012	PERNO BOLT, BUTTON HEAD	1					

FIG. 30 CILINDRO MAESTRO DELANTERO — FRONT MASTER CYLINDER

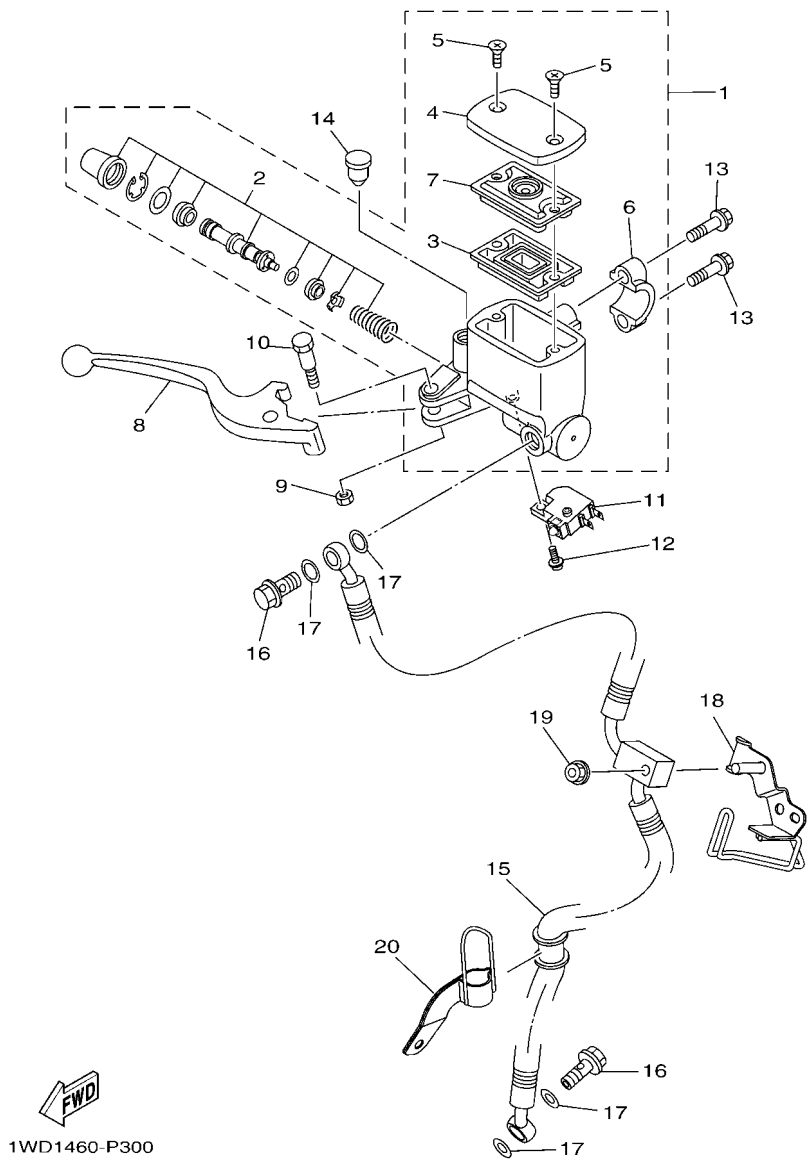

REF. Nº	CODIGO Nº PART NO.	DESCRIPCION DESCRIPTION	2YP6					OBSERVACIONES REMARKS
1	1WD–F5870–00	CILINDRO MAESTRO COMPLETO MASTER CYLINDER SUB ASSY	1					
2	1WD–F5807–00	.JUEGO DE CILINDRO MAESTRO .CYLINDER KIT, MASTER	1					
3	5RB–25854–00	.EMPAQUE,DIAFRAGMA .DIAPHRAGM, RESERVOIR	1					
4	1WD–F5852–00	.TAPA DE TANQUE DE RESERVA .CAP, RESERVOIR	1					
5	36Y–2589H–00	.TORNILLO .SCREW	2					
6	3RW–F5867–00	.SOPORTE DE CILINDRO MAESTRO .BRACKET, MASTER CYLINDER	1					
7	3C1–F5855–00	.BUJE DE DIAFRAGMA .BUSH,DIAPHRAGM	1					
8	1WD–H3922–00	PALANCA 2 LEVER 2	1					
9	95602–06100	TUERCA U NUT, U	1					
10	90109–06577	PERNO BOLT	1					
11	1HP–83980–01	INTERRUP. DE PARADA DELANTERO FRONT STOP SWITCH ASSY	1					
12	97602–04212	TORNILLO CON RONDONA SCREW, PAN HEAD WITH WASHER	1					
13	95027–06025	PERNO, DE BRIDA BOLT, FLANGE	2					
14	90338–09012	TAPON PLUG	1					
15	1WD–F5872–00	MANGUERA DE FRENO 1 HOSE, BRAKE 1	1					
16	90401–10812	PERNO DE UNION BOLT, UNION	2					
17	90201–10118	ARANDELA PLANA WASHER, PLATE	4					
18	1WD–F5875–00	SOPORTE DE MANGUERA FRENO 1 HOLDER, BRAKE HOSE 1	1					
19	95702–06500	TUERCA DE BRIDA NUT, FLANGE	1					
20	1WD–F5876–00	SOPORTE DE MANGUERA FRENO 2 HOLDER, BRAKE HOSE 2	1					

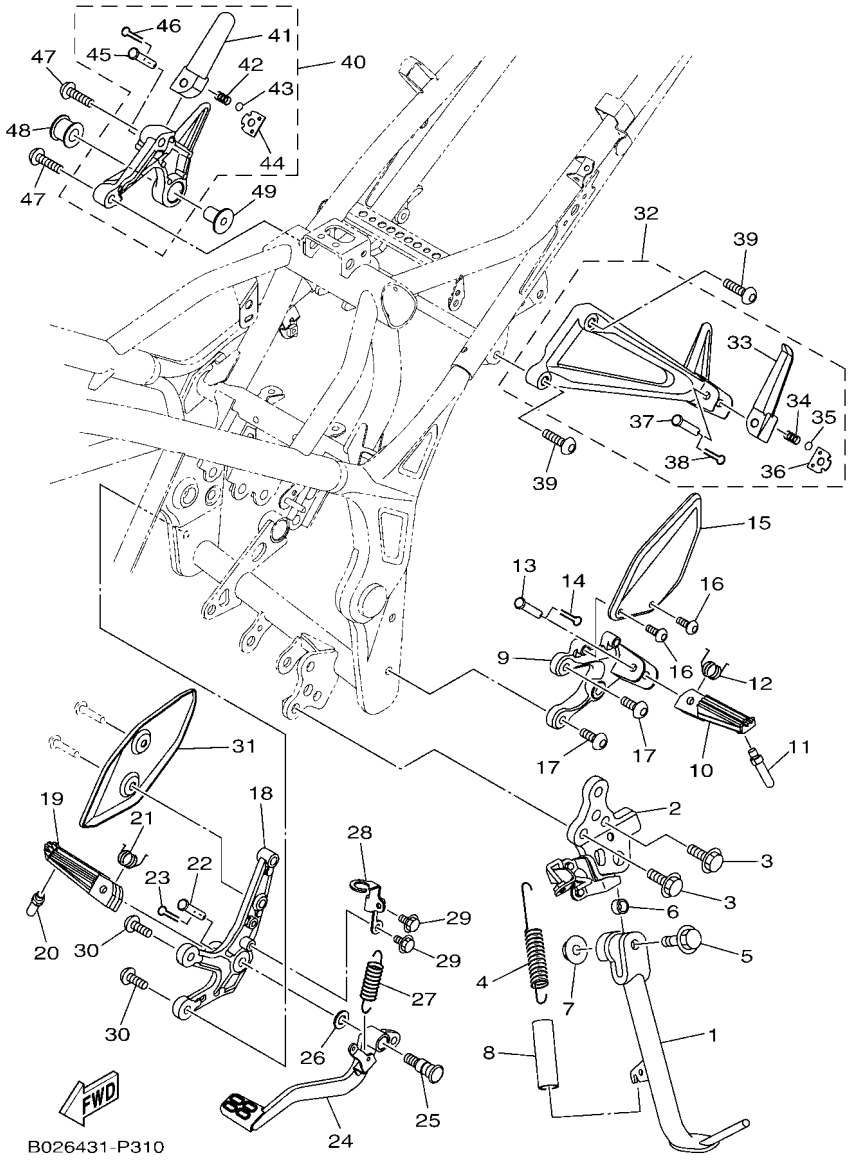

FIG. 31 SOPORTE & APOYAPIE — STAND & FOOTREST

REF. Nº	CODIGO Nº PART NO.	DESCRIPCION DESCRIPTION	2YP6					OBSERVACIONES REMARKS
1	1WD–F7311–00	PUNTAL LATERAL STAND, SIDE	1					
2	1WD–F7321–10	SOPORTE DE PUNTAL LATERAL BRACKET, SIDE STAND	1					
3	95817–10025	TORNILLO BOLT, FLANGE	2					
4	90506–23812	RESORTE DE TENSION SPRING, TENSION	1					
5	90105–106A7	TORNILLO BOLT, FLANGE	1					
6	90387–10010	ESPACIADOR COLLAR	1					
7	95602–10200	TUERCA DE AUTO-CIERRE NUT, U FLANGE	1					
8	90445–217G3	TUBO (L70) HOSE (L70)	1					
9	1WD–F7442–00	SOPORTE 2 BRACKET 2	1					
10	1WD–F7451–00	APOYAPIE FOOTREST	1					
11	1WD–F7435–00	PERNO BOLT	1					
12	90508–183B9	RESORTE DE TORSION SPRING, TORSION	1					
13	90240–08145	PASADOR CON HOYO PIN, CLEVIS	1					
14	91401–25015	CHAVETA PIN, COTTER	1					
15	2MS–F7445–00	PLACE 1 PLATE 1	1					
16	90111–06013	TORNILLO BOLT,HEX. SOCKET BUTTON	2					
17	90109–085G6	PERNO BOLT	2					
18	1WD–F7443–00	SOPORTE 3 BRACKET 3	1					
19	1WD–F7461–00	APOYAPIE FOOTREST	1					
20	1WD–F7435–00	PERNO BOLT	1					
21	90508–183B9	RESORTE DE TORSION SPRING, TORSION	1					
22	90240–08145	PASADOR CON HOYO PIN, CLEVIS	1					
23	91401–25015	CHAVETA PIN, COTTER	1					
24	1WD–F7211–00	PEDAL DE FRENO PEDAL, BRAKE	1					
25	4BP–27261–00	EJE SHAFT	1					
26	90201–10021	ARANDELA PLANA WASHER, PLATE	1					
27	90506–26807	RESORTE DE TENSION SPRING, TENSION	1					

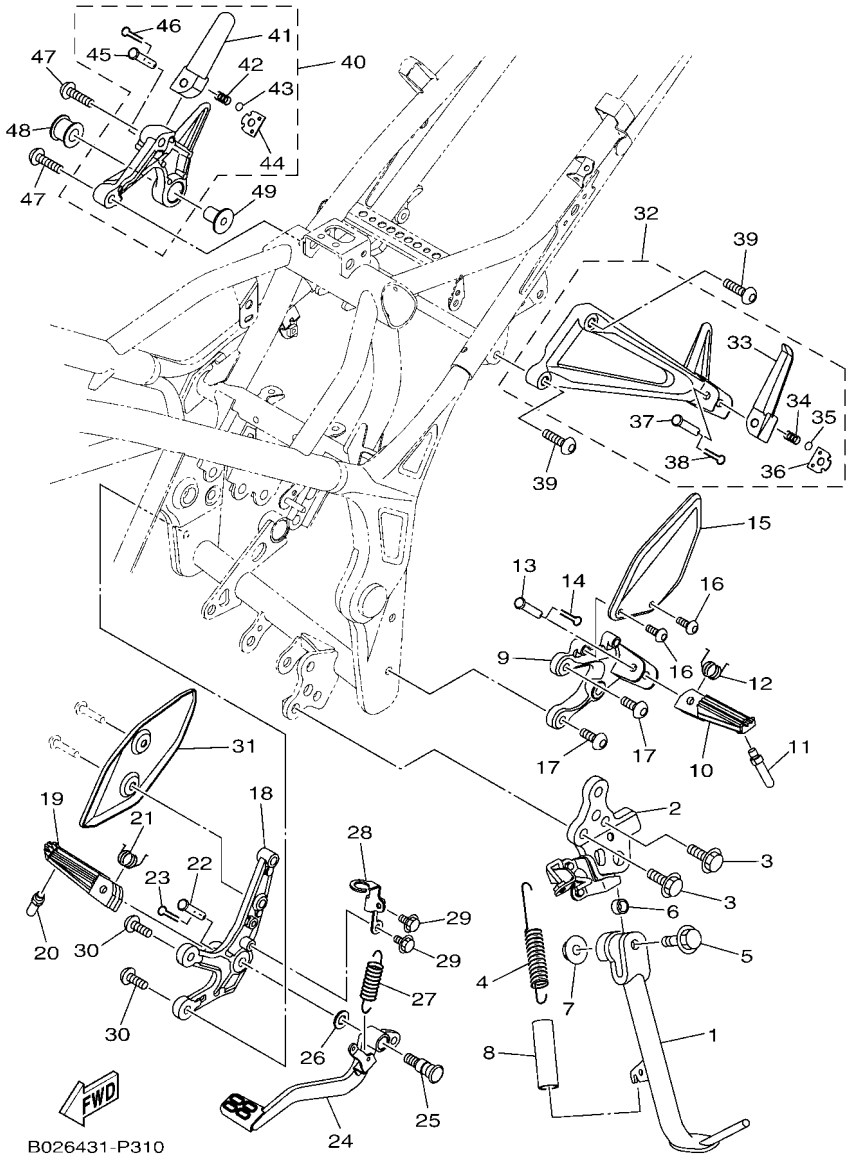

FIG. 31 SOPORTE & APOYAPIE — STAND & FOOTREST

REF. Nº	CODIGO Nº PART NO.	DESCRIPCION DESCRIPTION	2YP6					OBSERVACIONES REMARKS
28	1WD–F144G–00	SOPORTE DE INTERRUPTOR STAY, STOP SWITCH	1					
29	95802–06010	TORNILLO DE REBORDE BOLT, FLANGE	2					
30	90109–085G6	PERNO BOLT	2					
31	2MS–F7446–00	PLACE 2 PLATE 2	1					
32	1WD–F7430–00	APOYAPIE POSTERIOR COMPLETO 1 REAR FOOTREST ASSY 1	1					
33	1WD–F7431–00	.APOYAPIE POSTERIOR 1 .FOOTREST, REAR 1	1					
34	90501–12743	.RESORTE DE COMPRESION .SPRING, COMPRESSION	1					
35	93501–04830	.BOLA .BALL	1					
36	1WD–F7437–00	.ARANDELA ESPECIAL .WASHER, SPECIAL	1					
37	90240–08145	.PASADOR CON HOYO .PIN, CLEVIS	1					
38	91401–25015	.CHAVETA .PIN, COTTER	1					
39	90110–08071	TORNILLO ALLEN BOLT, HEXAGON SOCKET HEAD	2					
40	1WD–F7440–00	APOYAPIE POSTERIOR COMPLETO 2 REAR FOOTREST ASSY 2	1					
41	1WD–F7441–00	.APOYAPIE POSTERIOR 2 .FOOTREST, REAR 2	1					
42	90501–12743	.RESORTE DE COMPRESION .SPRING, COMPRESSION	1					
43	93501–04830	.BOLA .BALL	2					
44	1WD–F7437–00	.ARANDELA ESPECIAL .WASHER, SPECIAL	1					
45	90240–08145	.PASADOR CON HOYO .PIN, CLEVIS	1					
46	91401–25015	.CHAVETA .PIN, COTTER	1					
47	90110–08071	TORNILLO ALLEN BOLT, HEXAGON SOCKET HEAD	2					
48	5TP–E4747–00	AMORTIGUADOR DE SILENCIADOR DAMPER, MUFFLER	1					
49	90387–08813	ESPACIADOR COLLAR	1					

FIG. 32 CILINDRO MAESTRO TRASERO — REAR MASTER CYLINDER

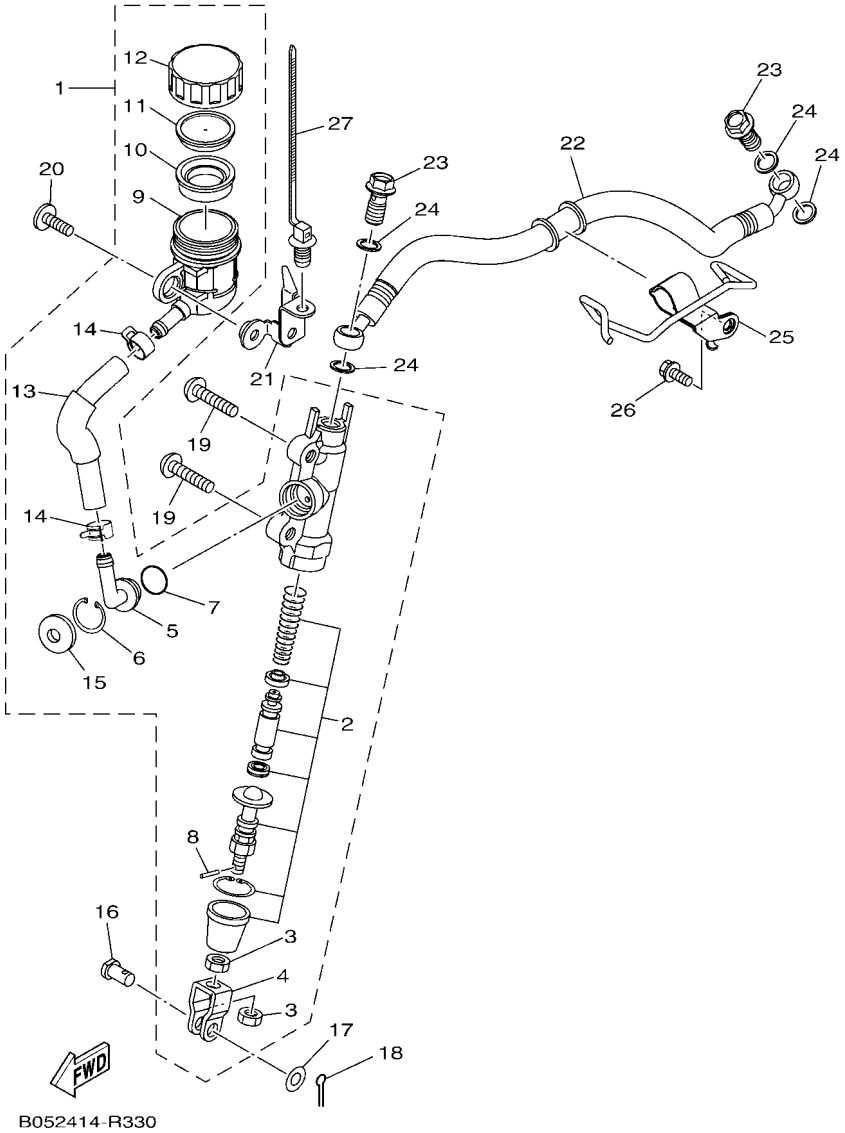

REF. Nº	CODIGO Nº PART NO.	DESCRIPCION DESCRIPTION	2YP6					OBSERVACIONES REMARKS
1	1WD–F580E–00	CYLINDRO MAESTRO TRASERO COMP REAR MASTER CYLINDER ASSY	1					
2	1WD–F5808–00	.JUEGO DE CILINDRO MAESTRO .CYLINDER KIT, MASTER	1					
3	4SS–27218–00	.TUERCA .NUT	2					
4	50C–F7222–00	.UNION .JOINT	1					
5	50C–F582A–50	.CONECTOR .JOINT	1					
6	50C–F5866–00	.PRESILLA REDONDA .CIRCLIP	1					
7	93210–15620	.ANILLO O .O-RING	1					
8	3KW–27234–00	.PASADOR DE VARILLA DE FRENO .PIN, BRAKE ROD	1					
9	50C–F5894–10	.TANQUE DE RESERVA .TANK, RESERVOIR	1					
10	2VN–F5854–00	.EMPAQUE,DIAFRAGMA .DIAPHRAGM, RESERVOIR	1					
11	50C–F5855–00	.BUJE DE DIAFRAGMA .BUSH,DIAPHRAGM	1					
12	1WD–F5852–50	.TAPA DE TANQUE DE RESERVA .CAP, RESERVOIR	1					
13	1WD–F5895–50	.MANGUERA DE TANQUE DE RESERVA .HOSE, RESERVOIR	1					
14	90467–12085	.PRESILLA .CLIP	2					
15	50C–F589A–00	.CUBIERTA PARA POLVO .COVER, DUST	1					
16	90240–08124	PASADOR CON HOYO PIN, CLEVIS	1					
17	90201–08083	ARANDELA PLANA WASHER, PLATE	1					
18	91401–20012	CHAVETA PIN, COTTER	1					
19	92012–08030	PERNO BOLT, BUTTON HEAD	2					
20	90111–06121	TORNILLO BOLT,HEX. SOCKET BUTTON	1					
21	B04–F582E–00	SOSTEN, TANQUE DE RESERVA HOLDER, RESERVE TANK	1					
22	1WD–F5873–00	MANGUERA DE FRENO 2 HOSE, BRAKE 2	1					
23	90401–10812	PERNO DE UNION BOLT, UNION	2					
24	90201–10118	ARANDELA PLANA WASHER, PLATE	4					
25	1WD–F5887–00	SOPORTE DE MANGUERA FRENO HOLDER, BRAKE HOSE	1					
26	95827–06014	TORNILLO BOLT, FLANGE	1					
27	90464–30009	BRIDA CLAMP	1					

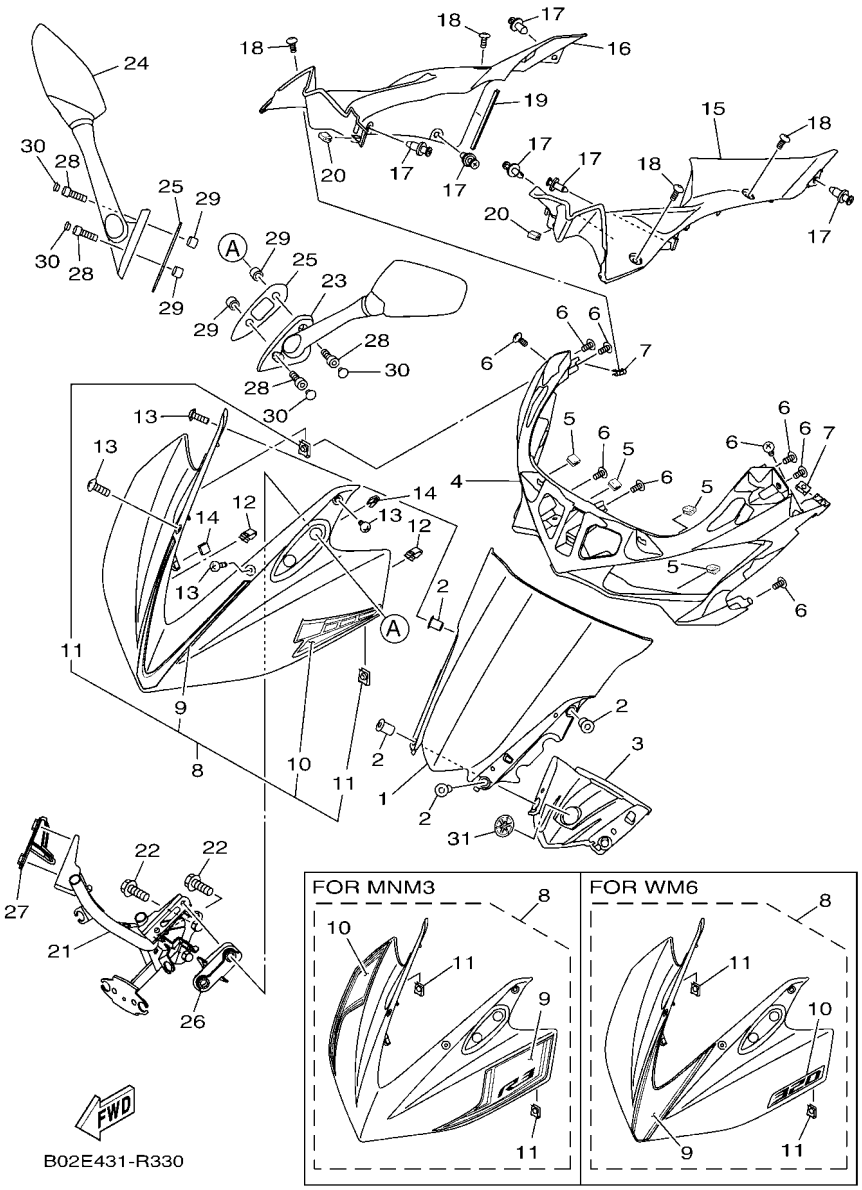

FIG. 33 PARABRISAS — WINDSHIELD

REF. Nº	CODIGO Nº PART NO.	DESCRIPCION DESCRIPTION	2YP6					OBSERVACIONES REMARKS
1	1WD–F8381–00	PARABRISA WINDSHIELD	1					
2	90179–05849	TUERCA NUT	4					
3	1WD–H3559–00	CUBIERTA DE MEDIDOR COVER, METER	1					
4	1WD–F835G–00	CARROCERIA, DELANT. SUP. 1 BODY, FRONT UPPER 1	1					
5	1WD–F8376–00	ADORNO TRIM	4					
6	97702–50016	TORNILLO ROSCA HEMBRA SCREW, TAPPING	9					
7	90183–050A7	TUERCA DE RESORTE NUT, SPRING	2					
8	1WD–XF83F–60–P1	CUERPO, DE COBERTURE BODY COWLING SUB ASSY	1					UR PARA DPBMC UR FOR DPBMC
	1WD–XF83F–10–P4	CUERPO, DE COBERTURE BODY COWLING SUB ASSY	1					UR PARA MNM3 UR FOR MNM3
	1WD–XF83F–20–P3	CUERPO, DE COBERTURE BODY COWLING SUB ASSY	1					UR PARA WM6 UR FOR WM6
9	1WD–F8391–60	.CALCOMANIA 1 .GRAPHIC 1	1					UR PARA DPBMC UR FOR DPBMC
	2MS–F8391–70	.CALCOMANIA 1 .GRAPHIC 1	1					UR PARA MNM3 UR FOR MNM3
	1WD–F8391–80	.CALCOMANIA 1 .GRAPHIC 1	1					UR PARA WM6 UR FOR WM6
10	1WD–F8392–60	.CALCOMANIA 2 .GRAPHIC 2	1					UR PARA DPBMC UR FOR DPBMC
	1WD–F8392–70	.CALCOMANIA 2 .GRAPHIC 2	1					UR PARA MNM3 UR FOR MNM3
	2MS–F8392–80	.CALCOMANIA 2 .GRAPHIC 2	1					UR PARA WM6 UR FOR WM6
11	90183–05807	.TUERCA DE RESORTE .NUT, SPRING	2					
12	44D–F8379–00	GANCHO HOOK	2					
13	90150–05023	TORNILLO CABEZA REDONDA SCREW, ROUND HEAD	4					
14	1WD–F8376–00	ADORNO TRIM	2					
15	1WD–F836N–00	PANEL 4 PANEL, INNER 4	1					
16	1WD–F836R–00	PANEL 5 PANEL, INNER 5	1					
17	90269–06081	REMACHE RIVET	6					
18	90111–05003	TORNILLO BOLT,HEX. SOCKET BUTTON	4					
19	1WD–F1278–00	MOLDURA MOLD	1					
20	1WD–F8376–00	ADORNO TRIM	2					
21	1WD–F8356–00	SOPORTE 1 STAY 1	1					

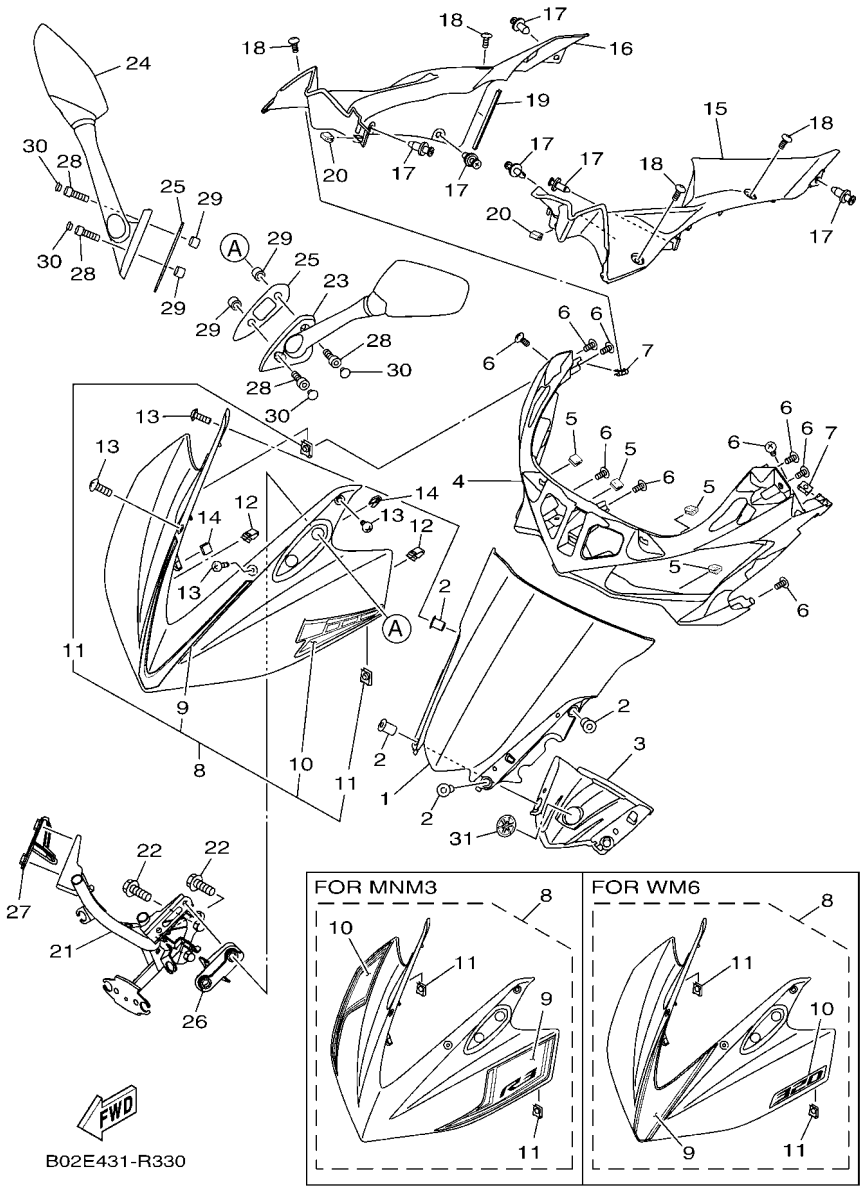

FIG. 33 PARABRISAS — WINDSHIELD

REF. Nº	CODIGO Nº PART NO.	DESCRIPCION DESCRIPTION	2YP6					OBSERVACIONES REMARKS
22	95812–08035	TORNILLO DE REBORDE BOLT, FLANGE	2					
23	1WD–F6280–10	ESPEJO COMPLETO (IZQUIERDO) REAR VIEW MIRROR ASSY (LEFT)	1					
24	1WD–F6290–10	ESPEJO COMPLETO (DERECHO) REAR VIEW MIRROR ASSY (RIGHT)	1					
25	1WD–F8483–00	PLACA 1 PLATE, RUBBER 1	2					
26	1WD–F8484–00	PLACA 2 PLATE, RUBBER 2	1					
27	1WD–F8485–00	PLACA 3 PLATE, RUBBER 3	1					
28	91317–06025	PERNO BOLT	4					
29	90387–068C2	ESPACIADOR COLLAR	4					
30	90338–05010	TAPON PLUG	4					
31	1PA–F836B–00	MARCA TUNING FORK MARK	1					

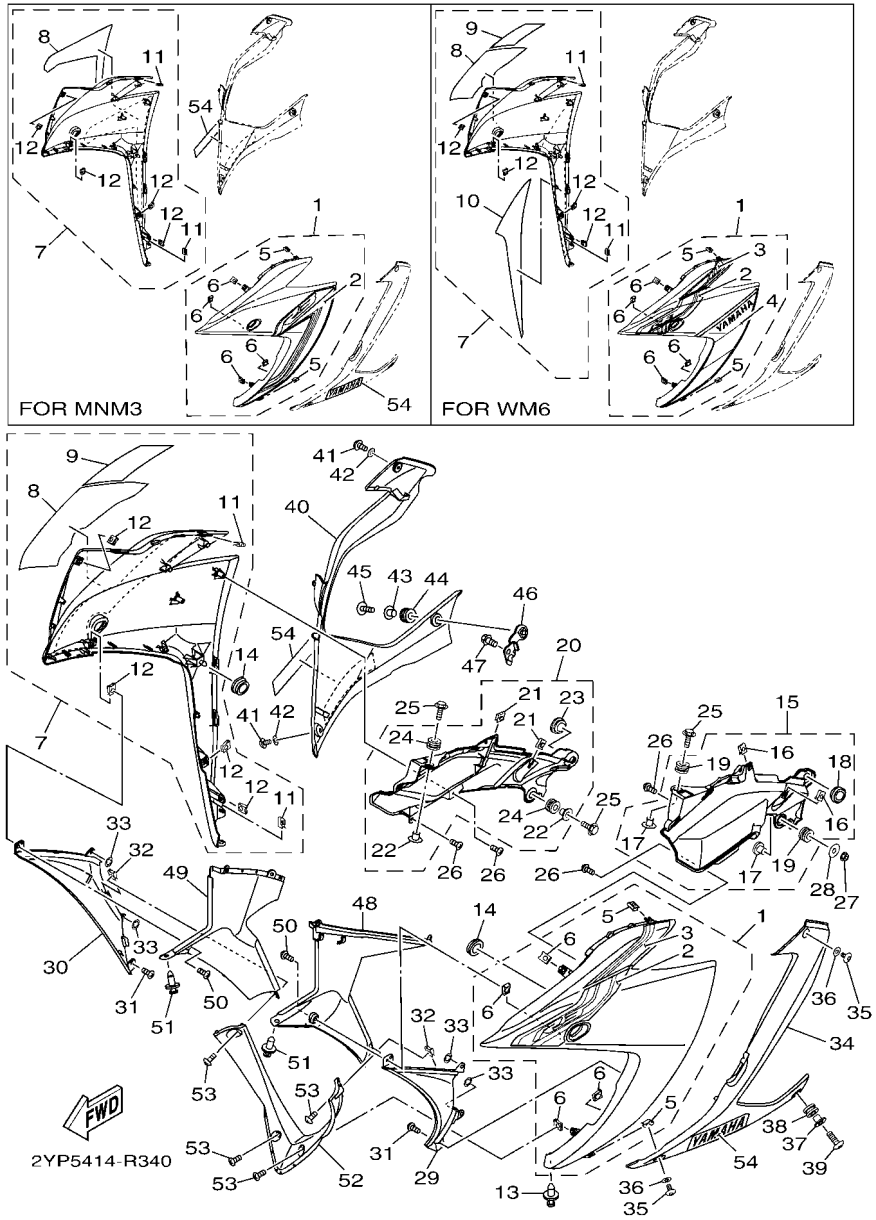

FIG. 34 BOVEDA 1 — COWLING 1

REF. Nº	CODIGO Nº PART NO.	DESCRIPCION DESCRIPTION	2YP6					OBSERVACIONES REMARKS
1	1WD–XF83L–70–P1	CARROCERIA, DELANT. SUP. 1 BODY, FR. UNDER 1 SUB ASSY	1					UR MS1 PARA DPBMC UR MS1 FOR DPBMC
	1WD–XF83L–10–P4	CARROCERIA, DELANT. SUP. 1 BODY, FR. UNDER 1 SUB ASSY	1					UR PARA MNM3 UR FOR MNM3
	1WD–XF83L–90–P2	CARROCERIA, DELANT. SUP. 1 BODY, FR. UNDER 1 SUB ASSY	1					UR PARA WM6 UR FOR WM6
2	2MS–F8393–60	.CALCOMANIA 3 .GRAPHIC 3	1					UR PARA DPBMC UR FOR DPBMC
	2MS–F8393–70	.CALCOMANIA 3 .GRAPHIC 3	1					UR PARA MNM3 UR FOR MNM3
	2MS–F8393–80	.CALCOMANIA 3 .GRAPHIC 3	1					UR PARA WM6 UR FOR WM6
3	2MS–F8398–60	.GRAFICO 5 .GRAPHIC 5	1					UR PARA DPBMC UR FOR DPBMC
	1WD–F8398–70	.GRAFICO 5 .GRAPHIC 5	1					UR PARA WM6 UR FOR WM6
4	1WD–F83GA–70	.CALCOMANIA 7 .GRAPHIC, 7	1					PARA WM6 FOR WM6
5	90183–050A7	.TUERCA DE RESORTE .NUT, SPRING	2					
6	90183–05807	.TUERCA DE RESORTE .NUT, SPRING	4					
7	1WD–XF83M–80–P1	CARROCERIA, DELANT. SUP. 2 BODY, FR. UNDER 2 SUB ASSY	1					UR MS1 PARA DPBMC UR MS1 FOR DPBMC
	1WD–XF83M–10–P4	CARROCERIA, DELANT. SUP. 2 BODY, FR. UNDER 2 SUB ASSY	1					UR PARA MNM3 UR FOR MNM3
	1WD–XF83M–90–P2	CARROCERIA, DELANT. SUP. 2 BODY, FR. UNDER 2 SUB ASSY	1					UR PARA WM6 UR FOR WM6
8	2MS–F8394–60	.CALCOMANIA 4 .GRAPHIC 4	1					UR PARA DPBMC UR FOR DPBMC
	2MS–F8394–70	.CALCOMANIA 4 .GRAPHIC 4	1					UR PARA MNM3 UR FOR MNM3
	2MS–F8394–80	.CALCOMANIA 4 .GRAPHIC 4	1					UR PARA WM6 UR FOR WM6
9	1WD–F8399–60	.CALCOMANIA 6 .GRAPHIC 6	1					UR PARA DPBMC UR FOR DPBMC
	1WD–F8399–70	.CALCOMANIA 6 .GRAPHIC 6	1					UR PARA WM6 UR FOR WM6
10	1WD–F83GB–70	.CALCOMANIA 8 .GRAPHIC, 8	1					PARA WM6 FOR WM6
11	90183–050A7	.TUERCA DE RESORTE .NUT, SPRING	2					
12	90183–05807	.TUERCA DE RESORTE .NUT, SPRING	4					
13	90269–06081	REMACHE RIVET	1					
14	90480–01558	TAPON GROMMET	2					
15	1WD–XF11W–10–P0	CUBIERTA 7 COVER 7	1					MBL2 PARA DPBMC MBL2 FOR DPBMC
	1WD–XF11W–00–P2	CUBIERTA 7 COVER 7	1					SMX PARA MNM3 SMX FOR MNM3
	1WD–XF11W–40–P0	CUBIERTA 7 COVER 7	1					MBL2 PARA WM6 MBL2 FOR WM6

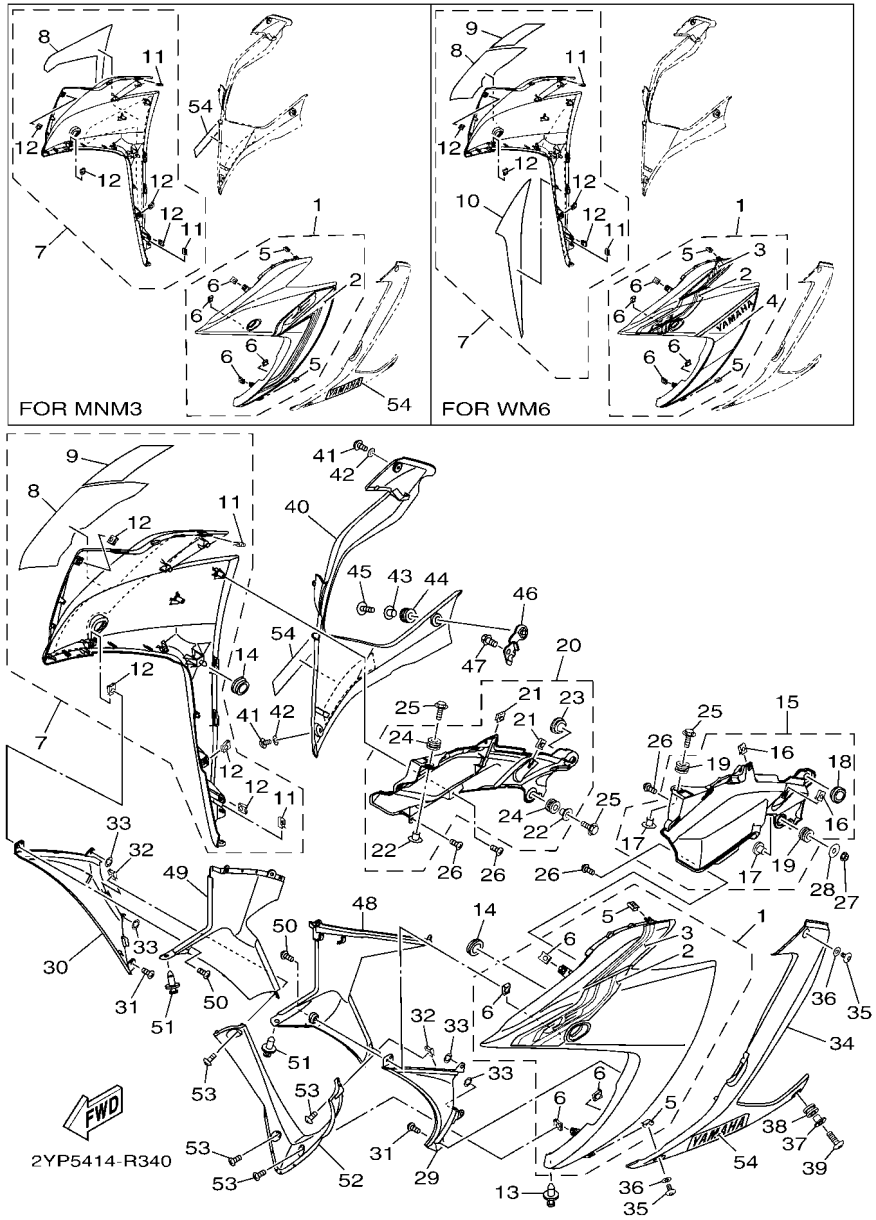

FIG. 34 BOVEDA 1 — COWLING 1

REF. Nº	CODIGO Nº PART NO.	DESCRIPCION DESCRIPTION	2YP6					OBSERVACIONES REMARKS
16	90183–050A7	.TUERCA DE RESORTE .NUT, SPRING	2					
17	90387–06899	.ESPACIADOR .COLLAR	2					
18	90480–01558	.TAPON .GROMMET	1					
19	90480–12808	.TAPON .GROMMET	2					
20	1WD–XF11X–10–P0	CUBIERTA 8 COVER 8	1					MBL2 PARA DPBMC MBL2 FOR DPBMC
	1WD–XF11X–00–P2	CUBIERTA 8 COVER 8	1					SMX PARA MNM3 SMX FOR MNM3
	1WD–XF11X–40–P0	CUBIERTA 8 COVER 8	1					MBL2 PARA WM6 MBL2 FOR WM6
21	90183–050A7	.TUERCA DE RESORTE .NUT, SPRING	2					
22	90387–06899	.ESPACIADOR .COLLAR	2					
23	90480–01558	.TAPON .GROMMET	1					
24	90480–12808	.TAPON .GROMMET	2					
25	90119–06810	TORNILLO CON ARANDELA BOLT, WITH WASHER	3					
26	97707–50016	TORNILLO SCREW, TRUSS HEAD TAPPING	4					
27	95702–06500	TUERCA DE BRIDA NUT, FLANGE	1					
28	90201–06380	ARANDELA PLANA WASHER PLAIN	1					
29	1WD–F835U–00–P0	PANEL 1 PANEL 1	1					MBL2(DPBMC,WM6) MBL2(DPBMC,WM6)
	1WD–F835U–00–P1	PANEL 1 PANEL 1	1					SMX(MNM3) SMX(MNM3)
30	1WD–F835V–00–P0	PANEL 2 PANEL 2	1					MBL2(DPBMC,WM6) MBL2(DPBMC,WM6)
	1WD–F835V–00–P1	PANEL 2 PANEL 2	1					SMX(MNM3) SMX(MNM3)
31	97707–50016	TORNILLO SCREW, TRUSS HEAD TAPPING	2					
32	90183–05807	TUERCA DE RESORTE NUT, SPRING	2					
33	90183–06815	TUERCA DE RESORTE NUT, SPRING	4					
34	1WD–F8385–00–P0	CUBIERTA INFERIOR COVER, UNDER	1					MBL2(DPBMC,WM6) MBL2(DPBMC,WM6)
	1WD–F8385–00–P2	CUBIERTA INFERIOR COVER, UNDER	1					SMX(MNM3) SMX(MNM3)
35	90111–05003	TORNILLO BOLT,HEX. SOCKET BUTTON	2					
36	90202–05180	ARANDELA DE PLANA WASHER, PLATE	2					
37	90387–06899	ESPACIADOR COLLAR	1					

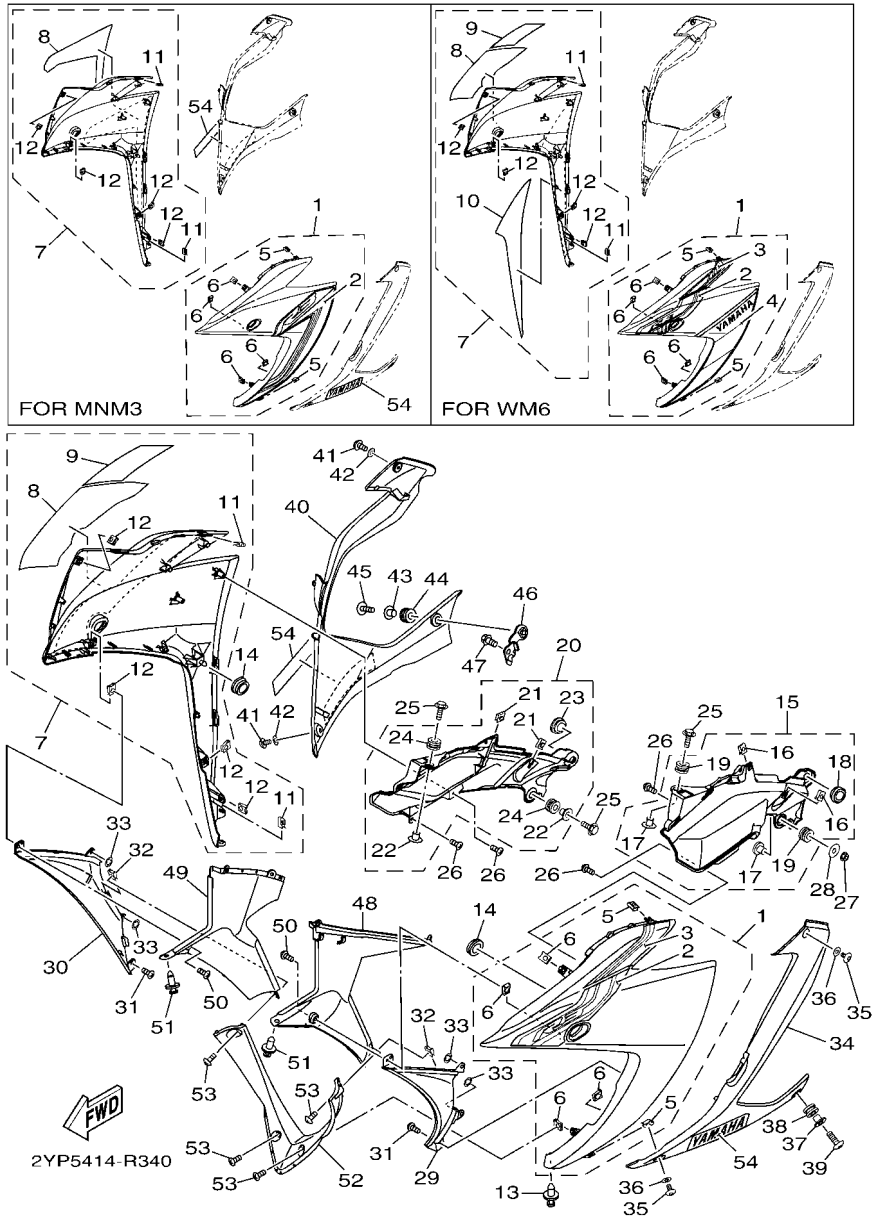

FIG. 34 BOVEDA 1 — COWLING 1

REF. Nº	CODIGO Nº PART NO.	DESCRIPCION DESCRIPTION	2YP6					OBSERVACIONES REMARKS
38	90480–12808	TAPON GROMMET	1					
39	90111–06117	TORNILLO BOLT,HEX. SOCKET BUTTON	1					
40	1WD–F8395–00–P0	CUBIERTA INFERIOR COVER, UNDER 2	1					MBL2(DPBMC,WM6) MBL2(DPBMC,WM6)
	1WD–F8395–00–P2	CUBIERTA INFERIOR COVER, UNDER 2	1					SMX(MNM3) SMX(MNM3)
41	90111–05003	TORNILLO BOLT,HEX. SOCKET BUTTON	2					
42	90202–05180	ARANDELA DE PLANA WASHER, PLATE	2					
43	90387–06899	ESPACIADOR COLLAR	1					
44	90480–12808	TAPON GROMMET	1					
45	90111–06117	TORNILLO BOLT,HEX. SOCKET BUTTON	1					
46	1WD–F833E–00	SOPORTE 8 BRACKET 8	1					
47	95022–06012	PERNO, DE BRIDA BOLT, FLANGE	1					
48	1WD–F836K–00	PANEL 1 PANEL, INNER 1	1					
49	1WD–F836L–00	PANEL 2 PANEL, INNER 2	1					
50	97707–50016	TORNILLO SCREW, TRUSS HEAD TAPPING	2					
51	90269–06081	REMACHE RIVET	2					
52	1WD–F836M–00	PANEL 3 PANEL, INNER 3	1					
53	97707–50016	TORNILLO SCREW, TRUSS HEAD TAPPING	4					
54	1WD–F8328–30	EMBLEMA EMBLEM	2					UR PARA DPBMC UR FOR DPBMC
	1WD–F8328–40	EMBLEMA EMBLEM	2					UR PARA MNM3 UR FOR MNM3

FIG. 35 GENERADOR — GENERATOR

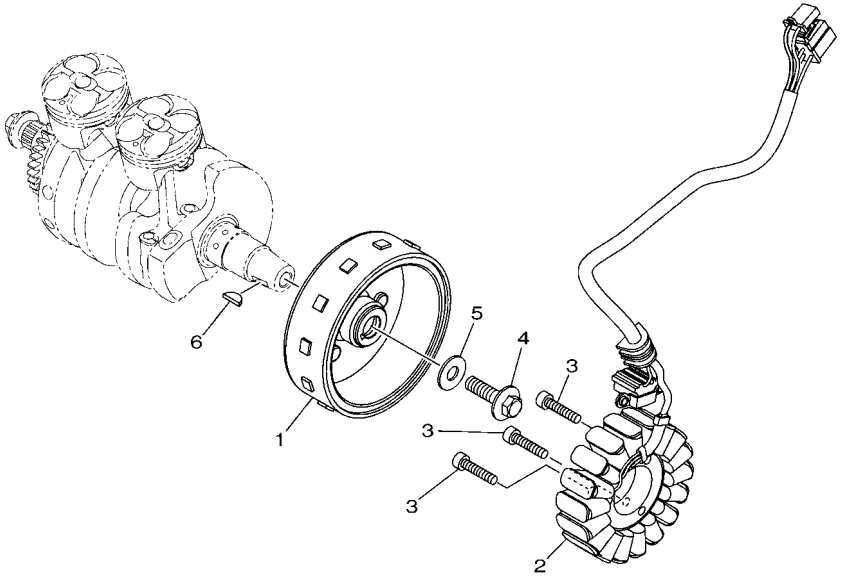

1WD1460-P350

REF. Nº	CODIGO Nº PART NO.	DESCRIPCION DESCRIPTION	2YP6					OBSERVACIONES REMARKS
1	1WD–H1450–00	ROTOR COMPLETO ROTOR ASSY	1					
2	1WD–H1410–01	ESTATOR COMPLETO STATOR ASSY	1					
3	91312–06030	TORNILLO BOLT	3					
4	90105–10883	TORNILLO BOLT, FLANGE	1					
5	90201–102R1	ARANDELA PLANA WASHER, PLATE	1					
6	90280–05013	CUNA WOODRUFF KEY, WOODRUFF	1					

FIG. 36 MOTOR DE ARRANQUE — STARTING MOTOR

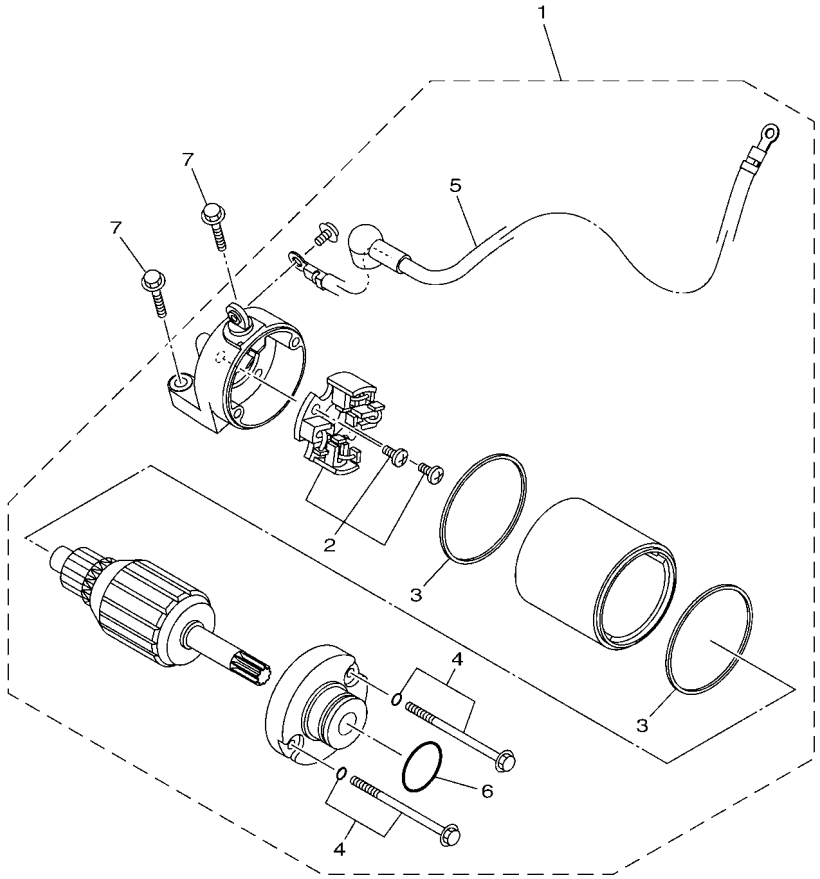

1WD1460-P360

REF. Nº	CODIGO Nº PART NO.	DESCRIPCION DESCRIPTION	2YP6					OBSERVACIONES REMARKS
1	1WD–H1800–00	MOTOR DE ARRANQUE COMPLETO STARTING MOTOR ASSY	1					
2	1WD–H1801–00	.JUEGO DE ESCOBILLA .BRUSH SET	1					
3	1WD–H1861–00	.EMPAQUETADURA .GASKET	2					
4	1WD–H1828–00	.TORNILLO DE EMPUJE 2 .SCREW 2	2					
5	1WD–H183G–00	.CABLE DEL MOTOR COMPL. .CORD COMP.	1					
6	4FP–H182L–00	.ANILLO EN O .O-RING 1	1					
7	95022–06025	PERNO, DE BRIDA BOLT, FLANGE	2					

FIG. 37 LUZ DE DESTELLADOR — FLASHER LIGHT

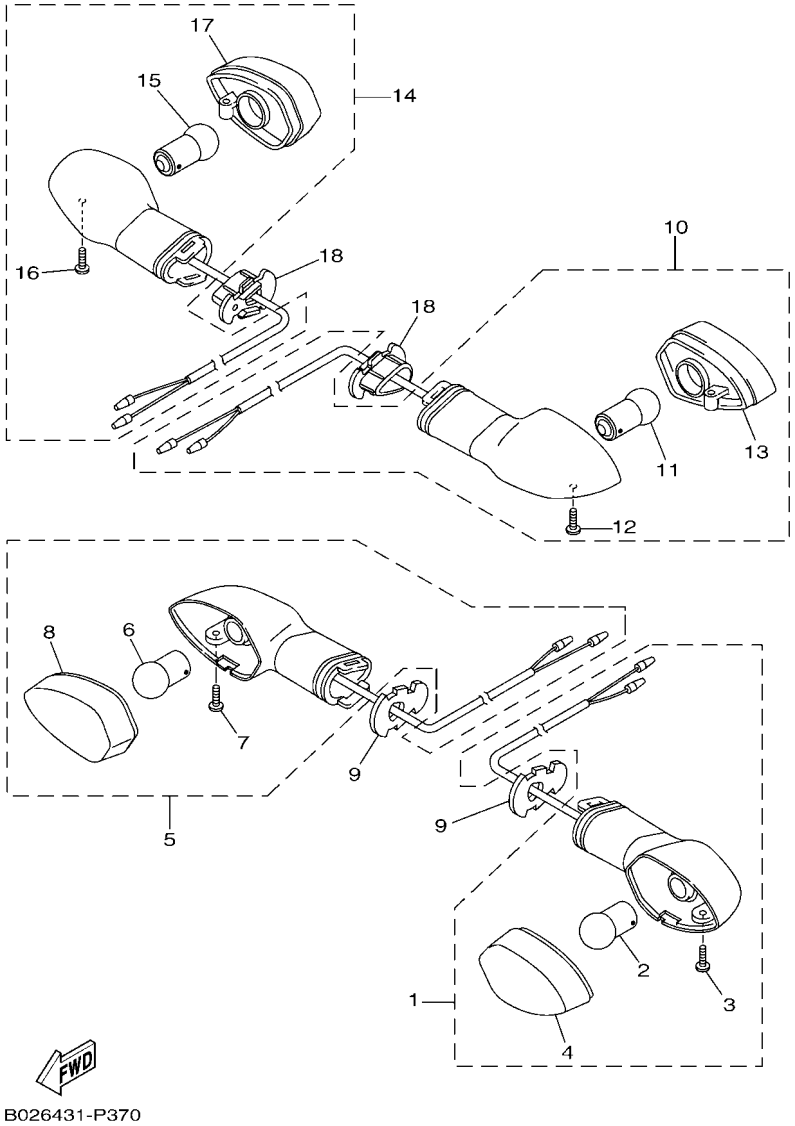

REF. Nº	CODIGO Nº PART NO.	DESCRIPCION DESCRIPTION	2YP6					OBSERVACIONES REMARKS
1	1WD–H3310–10	DESTELLADOR DE LUZ DELANT. FRONT FLASHER LIGHT ASSY 1	1					
2	1KB–83311–00	.BOMBILLA (12V-10W) .BULB, FLASHER (12V-10W)	1					
3	3D9–H3333–10	.TORNILLO ACCESORIO DE LENTE .SCREW, LENS FITTING	1					
4	1KB–8333A–00	.LENTES COMPLETO 1 .LENS COMP 1	1					
5	1WD–H3320–10	DESTELLADOR DE LUZ DELANT. FRONT FLASHER LIGHT ASSY 2	1					
6	1KB–83311–00	.BOMBILLA (12V-10W) .BULB, FLASHER (12V-10W)	1					
7	3D9–H3333–10	.TORNILLO ACCESORIO DE LENTE .SCREW, LENS FITTING	1					
8	1KB–8334A–00	.LENTES COMPLETO 2 .LENS COMP 2	1					
9	3D7–83318–10	SOPORTE DE DESTELLADOR 1 STAY, FLASHER 1	2					
10	1WD–H3330–10	DESTELLADOR DE LUZ TRAS.COMPL. REAR FLASHER LIGHT ASSY 1	1					
11	1KB–83311–00	.BOMBILLA (12V-10W) .BULB, FLASHER (12V-10W)	1					
12	3D9–H3333–10	.TORNILLO ACCESORIO DE LENTE .SCREW, LENS FITTING	1					
13	1KB–8334A–00	.LENTES COMPLETO 2 .LENS COMP 2	1					
14	1WD–H3340–10	DESTELLADOR DE LUZ TRAS.COMPL. REAR FLASHER LIGHT ASSY 2	1					
15	1KB–83311–00	.BOMBILLA (12V-10W) .BULB, FLASHER (12V-10W)	1					
16	3D9–H3333–10	.TORNILLO ACCESORIO DE LENTE .SCREW, LENS FITTING	1					
17	1KB–8333A–00	.LENTES COMPLETO 1 .LENS COMP 1	1					
18	1WD–H3318–00	SOPORTE DE DESTELLADOR 1 STAY, FLASHER 1	2					

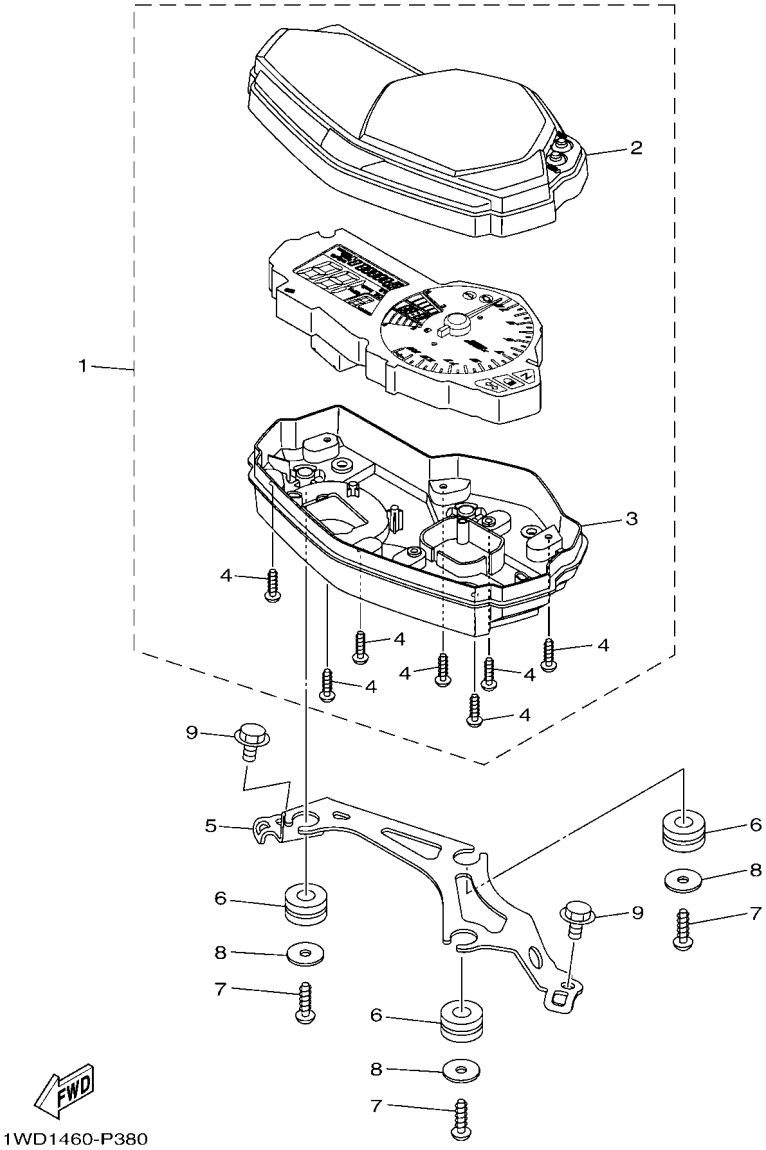

FIG. 38 MEDIDOR METER

REF. Nº	CODIGO Nº PART NO.	DESCRIPCION DESCRIPTION	2YP6					OBSERVACIONES REMARKS
1	2MS–H3500–10	METRO COMPLETO METER ASSY	1					
2	1WD–H3571–00	.CAJA DE VELOCIMETRO SUPERIOR .CASE, SPEEDOMETER UPPER	1					
3	1WD–H3572–00	.CAJA DE VELOCIMETRO INFERIOR .CASE, SPEEDOMETER LOWER	1					
4	97702–30016	.TORNILLO ROSCA HEMBRA .SCREW, TAPPING	7					
5	1WD–H3519–00	SOPORTE DE MEDIDOR BRACKET, METER	1					
6	90480–14004	TAPON GROMMET	3					
7	97702–50016	TORNILLO ROSCA HEMBRA SCREW, TAPPING	3					
8	90201–05827	ARANDELA PLANA WASHER, PLATE	3					
9	95022–06010	PERNO, DE BRIDA BOLT, FLANGE	2					

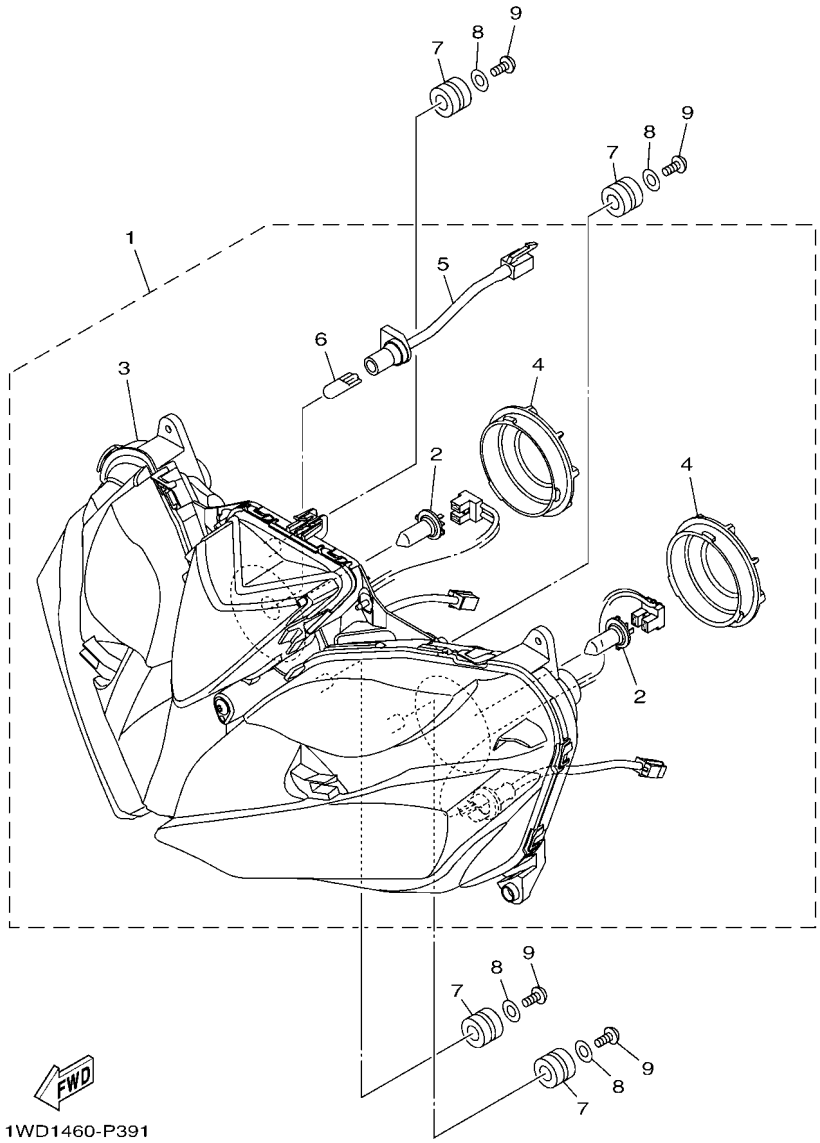

FIG. 39 FARO DELANTERO — HEADLIGHT

REF. Nº	CODIGO Nº PART NO.	DESCRIPCION DESCRIPTION	2YP6					OBSERVACIONES REMARKS
1	1WD–H4300–00	FARO DELANTERO COMPLETO HEADLIGHT ASSY	1					
2	1WD–H4314–00	.AMPOLLETA (12V-55W) .BULB (12V-55W)	2					
3	1WD–H4303–00	.UNIDAD DE FARO DELANTERO COMPL .HEADLIGHT UNIT ASSY	1					
4	1WD–H4397–00	.CUBIERTA DE ENCASTRE .COVER, SOCKET	2					
5	1WD–H4340–00	.ENCASTRE DE CABLE COMPLETO .SOCKET CORD ASSY 1	1					
6	1WD–H4347–00	.AMPOLLETA (12V-5W) .BULB (12V-5W)	1					
7	90480–14004	TAPON GROMMET	4					
8	90201–05036	ARANDELA PLANA WASHER, PLATE	4					
9	97707–50016	TORNILLO SCREW, TRUSS HEAD TAPPING	4					

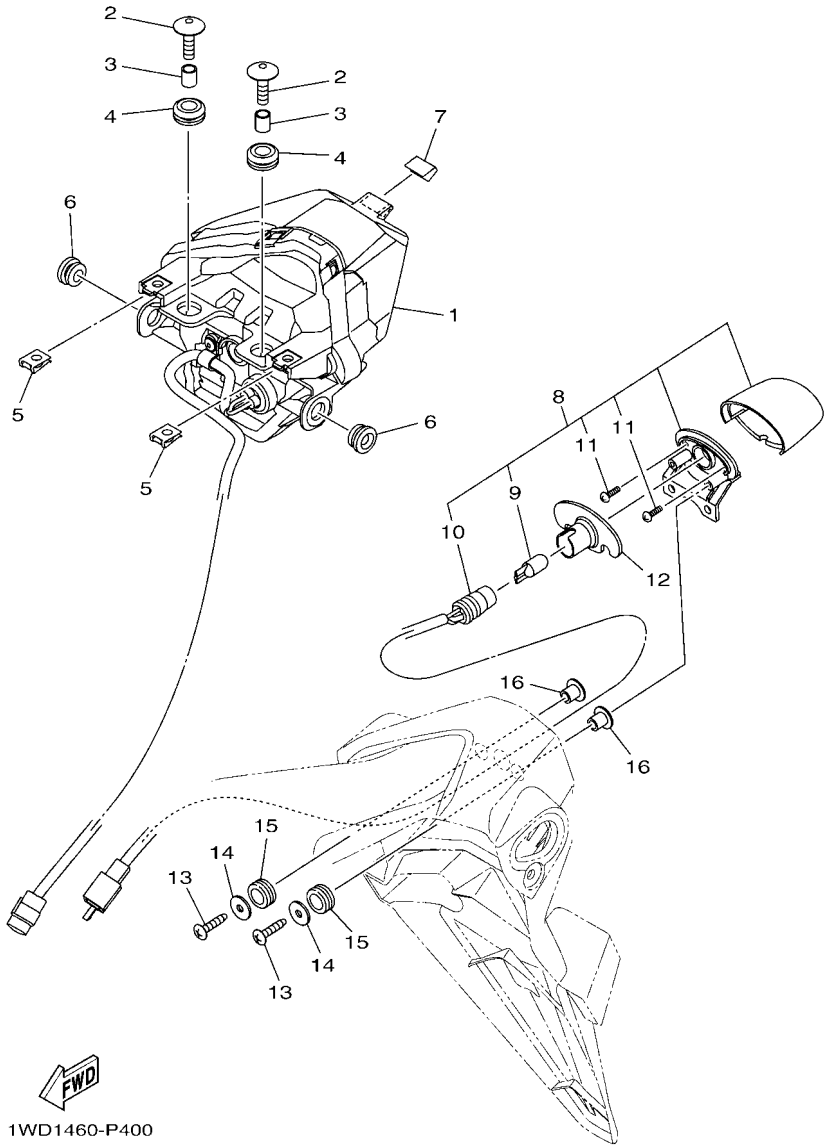

FIG. 40 LUZ DE COLA — TAILLIGHT

REF. Nº	CODIGO Nº PART NO.	DESCRIPCION DESCRIPTION	2YP6					OBSERVACIONES REMARKS
1	1WD–H4710–01	UNIDAD FARO TRASERO COMPL. TAILLIGHT UNIT ASSY	1					
2	90111–06117	TORNILLO BOLT,HEX. SOCKET BUTTON	2					
3	90387–067V1	ESPACIADOR COLLAR	2					
4	90480–13001	TAPON GROMMET	2					
5	90183–05807	TUERCA DE RESORTE NUT, SPRING	2					
6	90480–10003	TAPON GROMMET	2					
7	1WD–F1732–00	SELLO 1 SEAL 1	1					
8	1WD–H4740–00	LUZ DE LICENCIA COMPLETA LICENCE LIGHT ASSY	1					
9	1WD–H4744–00	.BOMBILLA (12V-5W) .BULB (12V-5W)	1					
10	1WD–H4547–00	.CABLE DE LUZ DE LICENCIA .CORD, LICENCE LIGHT	1					
11	1WD–H4726–00	.TORNILLO .SCREW	2					
12	1WD–H4753–00	AMORTIGUADOR DAMPER	1					
13	97707–40020	TORNILLO ROSCA HEMBRA SCREW, TAPPING	2					
14	90201–04804	ARANDELA PLANA WASHER, PLATE	2					
15	90480–11009	TAPON GROMMET	2					
16	90387–05042	ESPACIADOR COLLAR	2					

FIG. 41 INTERRUPTOR DE MANILLAR&PALANC HANDLE SWITCH & LEVER

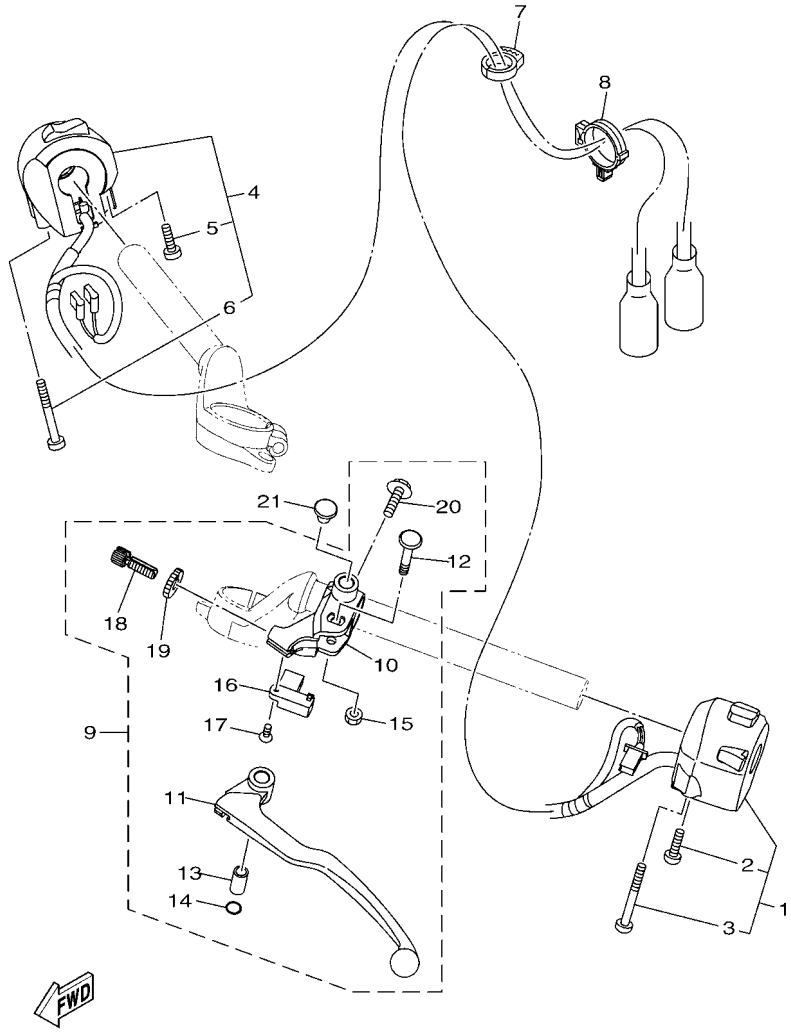

REF. Nº	CODIGO Nº PART NO.	DESCRIPCION DESCRIPTION	2YP6					OBSERVACIONES REMARKS
1	1WD–H3972–00	INTERRUPTOR DE MANIJA 4 SWITCH, HANDLE 4	1					
2	1WD–H2133–00	.TORNILLO ACCESORIO .SCREW, FITTING	1					
3	1WD–H395W–00	.TORNILLO, FIJACION .SCREW, SWITCH FITTING	1					
4	1WD–H3975–00	INTERRUPTOR DE MANIJA 2 SWITCH, HANDLE 2	1					
5	45P–H2133–00	.TORNILLO ACCESORIO .SCREW, FITTING	1					
6	45P–H395W–00	.TORNILLO, FIJACION .SCREW, SWITCH FITTING	1					
7	90464–16003	BRIDA CLAMP	1					
8	90464–30001	BRIDA CLAMP	1					
9	1WD–H2910–00	SOPORTE DE LEVA COMPLT 1 LEVER HOLDER ASSY (LEFT)	1					
10	1WD–H2911–00	.SOPORTE DE LEVA 1 .HOLDER, LEVER 1	1					
11	1WD–H3912–00	.PALANCA 1 .LEVER 1	1					
12	31A–83945–00	.PERNO DE PALANCA .BOLT, LEVER	1					
13	31A–83913–00	.COLLAR DE PALANCA 1 .COLLAR, LEVER 1	1					
14	93210–108H5	.ANILLO O .O-RING	1					
15	95602–06100	.TUERCA U .NUT, U	1					
16	5BP–H2917–00	.INTERRUPTOR .SWITCH	1					
17	90151–03005	.TORNILLO EMBUTIDO .SCREW, COUNTERSUNK	1					
18	90123–08083	.PERNO .BOLT	1					
19	90179–08316	.TUERCA .NUT	1					
20	97507–06525	.PERNO CON ARANDELA .BOLT, WITH WASHER	1					
21	90338–09012	TAPON PLUG	1					

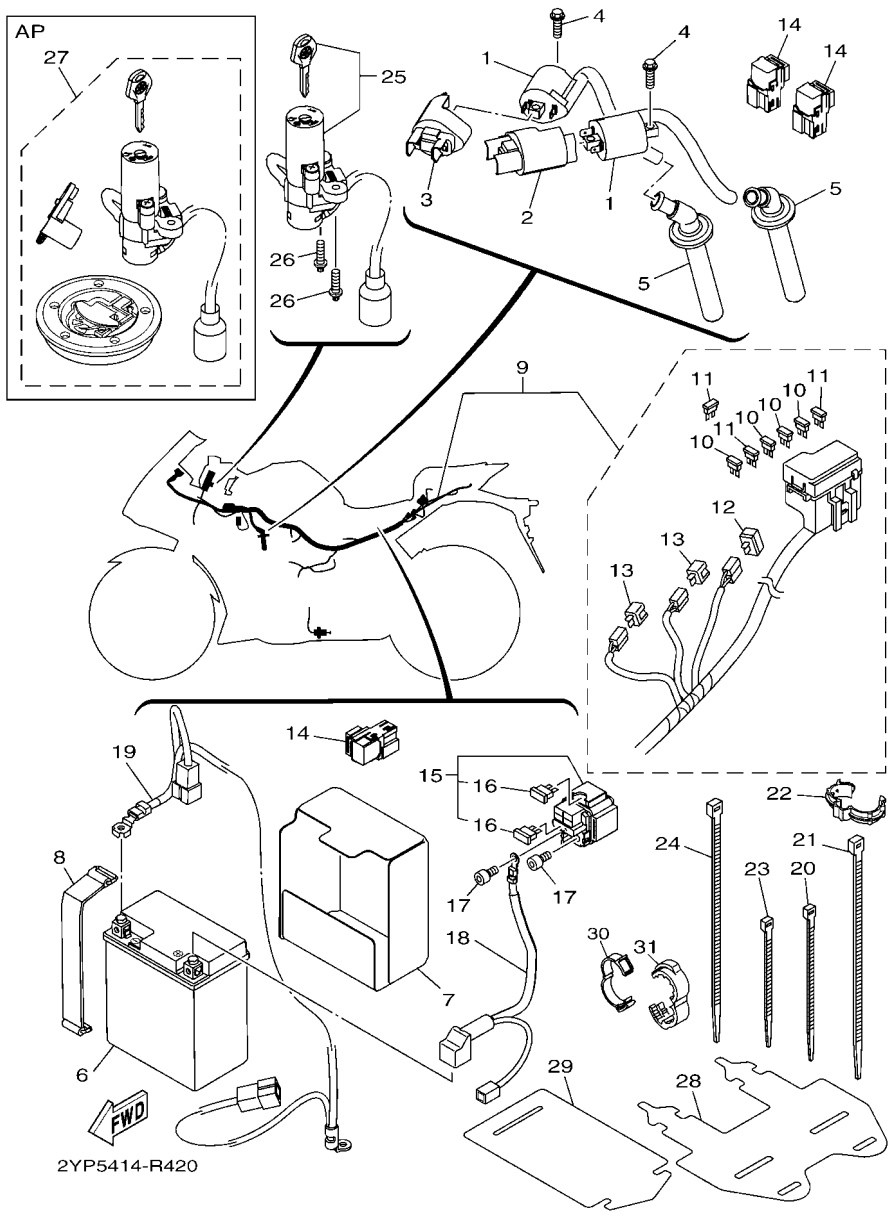

FIG. 42 EQUIPO ELECTRICO 1 — ELECTRICAL 1

REF. Nº	CODIGO Nº PART NO.	DESCRIPCION DESCRIPTION	2YP6					OBSERVACIONES REMARKS
1	1WD–H2310–00	BOBINA DE ENCENDIDO COMPLETA IGNITION COIL ASSY	2					
2	B04–H2314–00	CUBIERTA BOBINA ENCENDIDO COVER, IGNITION COIL	1					
3	B04–H2314–10	CUBIERTA BOBINA ENCENDIDO COVER, IGNITION COIL	1					
4	95022–06020	PERNO, DE BRIDA BOLT, FLANGE	2					
5	1WD–H2370–00	TAPON DE BUJIA COMPLT PLUG CAP ASSY	2					
6	1WD–H2100–00	BATERIA COMPLETA (GS GTZ8V) BATTERY ASSY (GS GTZ8V)	1					
7	1WD–H2121–00	BASE DE BATERIA PAD, BATTERY	1					
8	1WD–H2131–00	TIRANTE DE BATERIA BAND, BATTERY	1					
9	1WD–H2590–01	CONJUNTO DE CABLES WIRE HARNESS ASSY	1					
10	1WD–H2151–20	.FUSIBLE (7.5A BL) .FUSE (7.5A BL)	4					
11	1WD–H2151–10	.FUSIBLE (15A-BL) .FUSE (15A-BL)	3					
12	4WA–81980–00	.CONJUNTO DIODO .DIODE ASSY	1					
13	3WP–81980–00	.CONJUNTO DIODO .DIODE ASSY	2					
14	1WD–H1950–00	RELE COMPLETO RELAY ASSY	3					
15	1WD–H1940–00	CONJUNTO ARRANCADOR RELEVO STARTER RELAY ASSY	1					
16	1WD–H2151–00	.FUSIBLE (30A-BL) .FUSE (30A-BL)	2					
17	91312–05008	TORNILLO BOLT	2					
18	1WD–H2115–00	CABLE CONDUCTOR POSITIVO WIRE, PLUS LEAD	1					
19	1WD–H2116–01	CABLE CONDUCTOR NEGATIVO WIRE, MINUS LEAD	1					
20	90464–36800	BRIDA CLAMP	2					
21	90464–70800	BRIDA CLAMP	7					
22	90464–14803	BRIDA CLAMP	1					
23	90464–22800	BRIDA CLAMP	1					
24	90464–50800	BRIDA CLAMP	1					
25	1WD–H2501–01	LLAVE DE IGNICION COMPLT MAIN SWITCH STEERING LOCK	1					
26	90109–060G4	PERNO BOLT	2					
27	1WD–XH250–01	LLAVE DE IGNICION COMPLT MAIN SW. STRG. LOCK SUB ASSY	1					AP AP

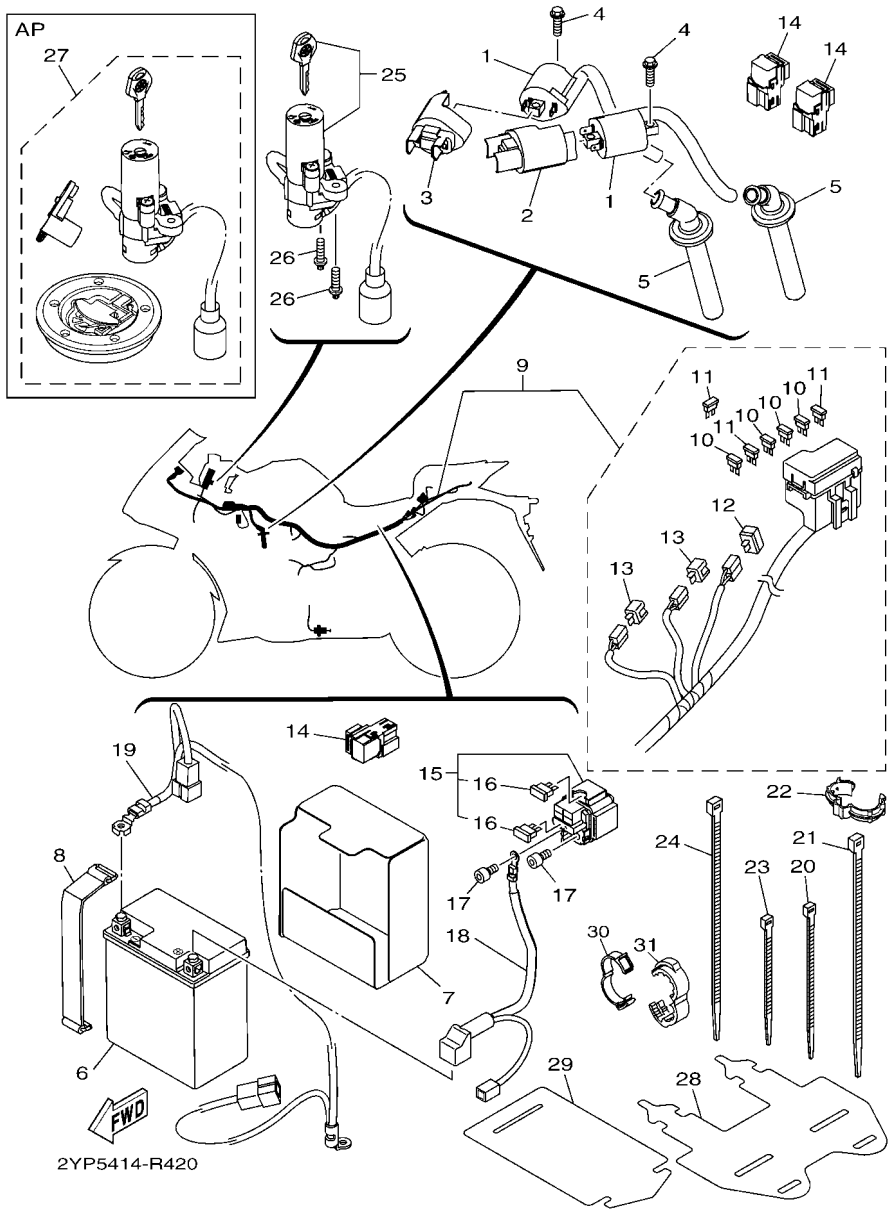

FIG. 42 EQUIPO ELECTRICO 1 — ELECTRICAL 1

REF. Nº	CODIGO Nº PART NO.	DESCRIPCION DESCRIPTION	2YP6					OBSERVACIONES REMARKS
28	1WD–F179E–00	BANDA BAND	1					
29	1WD–H2591–00	BANDA BAND	1					
30	90464–26001	BRIDA CLAMP	1					
31	90464–13227	BRIDA CLAMP	1					

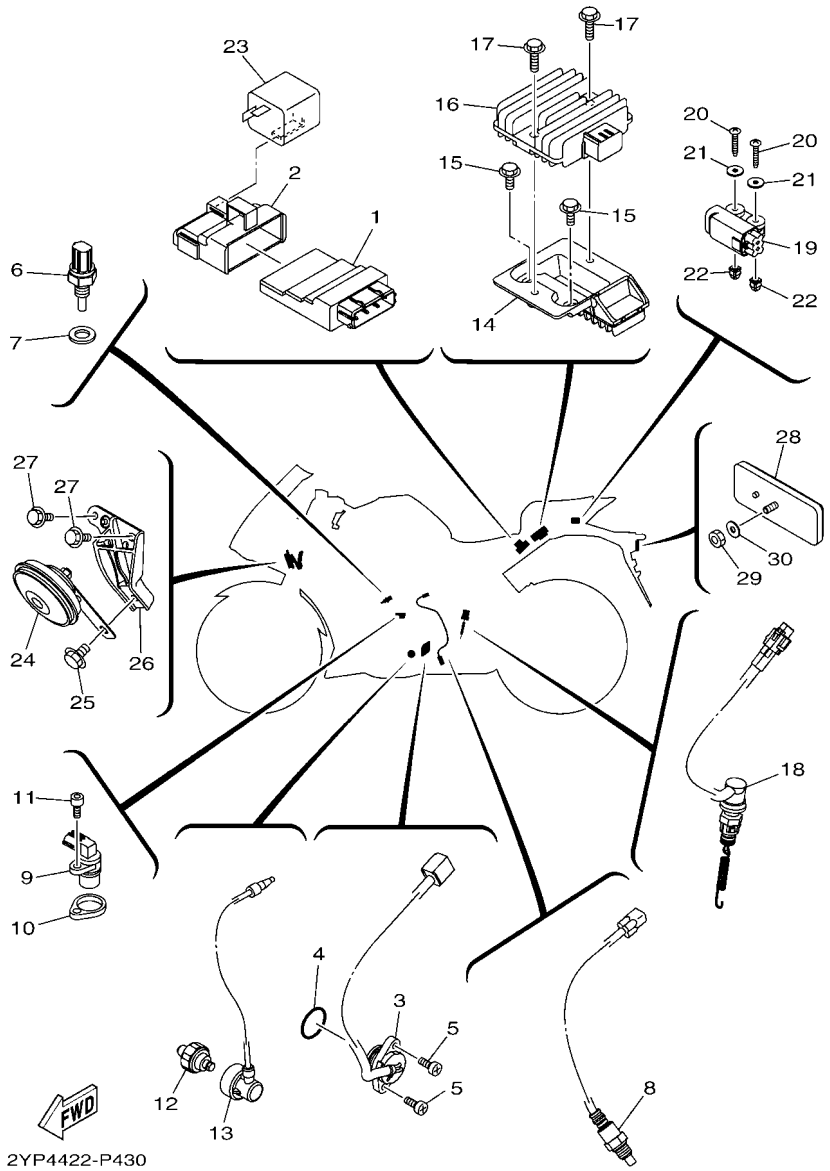

FIG. 43 EQUIPO ELECTRICO 2 — ELECTRICAL 2

REF. Nº	CODIGO Nº PART NO.	DESCRIPCION DESCRIPTION	2YP6					OBSERVACIONES REMARKS
1	2MS–H591A–01	UNIDAD CONTROL ENGINE CONTROL UNIT ASSY	1					
2	1WD–H5546–00	BANDA BAND	1					
3	1WD–H2540–00	INTERRUPTOR NEUTRAL COMPL NEUTRAL SWITCH ASSY	1					
4	93210–21801	ANILLO O O-RING	1					
5	98502–05016	TORNILLO SCREW, PAN HEAD	2					
6	54P–H3591–00	UNIDAD TERMOSTATO THERMO UNIT	1					
7	90430–10804	JUNTA GASKET	1					
8	1WD–H592A–00	SENSOR SENSOR, OXYGEN	1					
9	1WD–H3755–00	SENSOR DE VELOCIDAD SENSOR, SPEED	1					
10	2MS–E5317–00	SEPARADPR, MONTANTE DE MOTOR SPACER, ENGINE MOUNT	1					
11	91312–06016	TORNILLO BOLT	1					
12	1WS–82504–00	INTERRUPTOR PRESION DE ACEITE OIL PRESSURE SWITCH ASSY	1					
13	1WD–H1315–00	CABLE CONDUCTOR COMPLETO LEAD WIRE ASSY	1					
14	1WD–H1961–00	CUBIERTA COVER	1					
15	95802–06016	TORNILLO DE REBORDE BOLT, FLANGE	2					
16	1WD–H1960–00	RECTIFICADOR Y REGULADOR RECTIFIER & REGULATOR ASSY	1					
17	95802–06025	TORNILLO DE REBORDE BOLT, FLANGE	2					
18	1WD–H2530–10	INTERRUPTOR DE PARADA COMPLETO STOP SWITCH ASSY	1					
19	1WD–H2576–00	SENSOR ANGULO DE INCLINATION SENSOR, LEAN ANGLE	1					
20	90160–04009	TORNILLO REDONDO ROSCA HEMBRA SCREW, ROUND TAPPING	2					
21	90201–04028	ARANDELA PLANA WASHER, PLATE	2					
22	4B4–84334–00	TUERCA DE AJUSTE NUT, ADJUSTING	2					
23	1WD–H3351–00	RELE RELAY, FLASHER	1					
24	1WD–H3371–00	BOCINA HORN	1					
25	95802–08012	TORNILLO DE REBORDE BOLT, FLANGE	1					
26	1WD–H3378–00	SOPORTE DE BOCINA STAY, HORN	1					
27	95807–06016	TORNILLO BOLT, FLANGE	2					

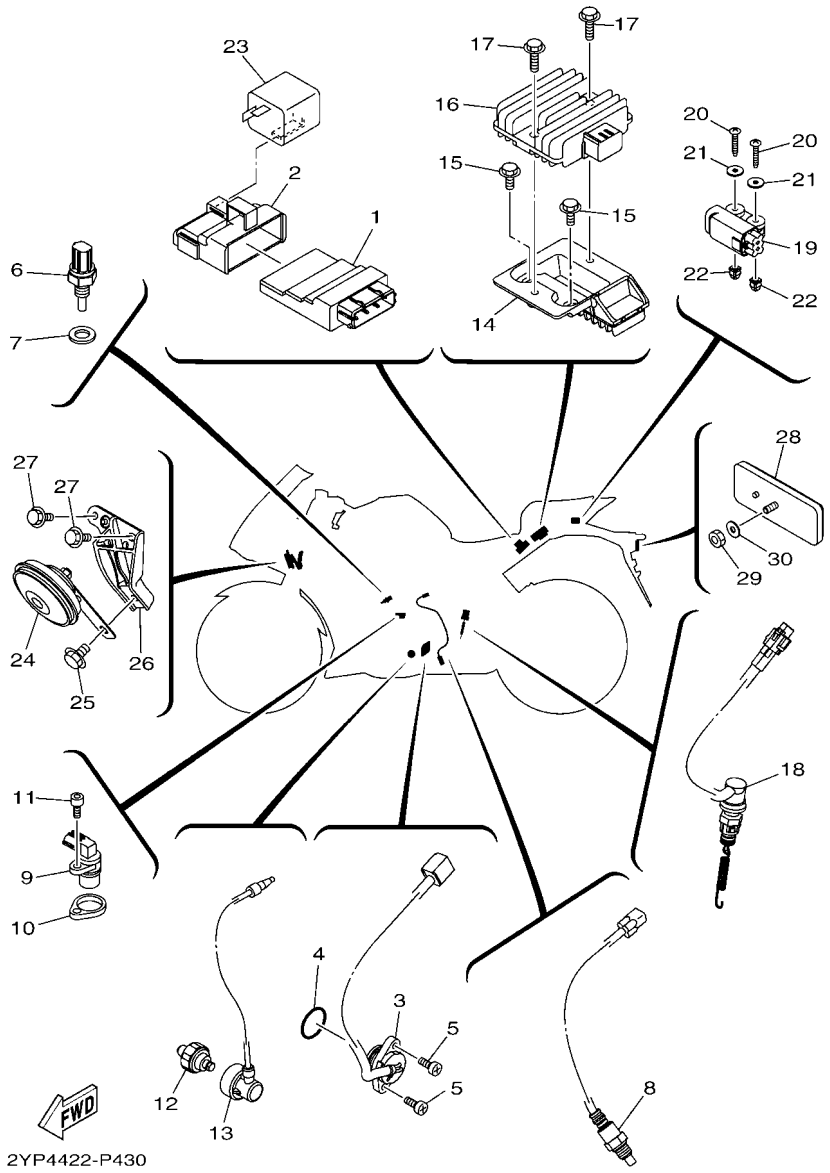

FIG. 43 EQUIPO ELECTRICO 2 — ELECTRICAL 2

REF. Nº	CODIGO Nº PART NO.	DESCRIPCION DESCRIPTION	2YP6					OBSERVACIONES REMARKS
28	3C1–H5130–00	REFLECTOR TRASERO COMPLETO REAR REFLECTOR ASSY	1					
29	95602–05100	TUERCA U NUT, U	1					
30	90201–05043	ARANDELA PLANA WASHER, PLATE	1					

INDICE NUMERICO
NUMERICAL INDEX

CODIGO Nº PART NO.	REF. Nº
2MS–11361–00	1 – 9
1WD–11411–00	2 – 1
1WD–11413–00	2 – 23
1WD–11413–10	2 – 23
1WD–11413–20	2 – 23
1WD–11413–30	2 – 23
1WD–11413–40	2 – 23
1WD–11416–00	2 – 10
1WD–11416–10	2 – 10
1WD–11416–20	2 – 10
1WD–11416–30	2 – 10
1WD–11416–40	2 – 10
1WD–11650–00	2 – 2
5SL–11654–00	2 – 3
1WD–11656–00	2 – 5
1WD–11656–10	2 – 5
1WD–11656–20	2 – 5
1WD–11656–30	2 – 5
2MS–12153–10	3 – 9
1HX–12168–F0	3 – 8
1HX–12168–H1	3 – 8
1HX–12168–K1	3 – 8
1HX–12168–M1	3 – 8
1HX–12168–R1	3 – 8
1HX–12168–U1	3 – 8
1HX–12168–W1	3 – 8
1HX–12168–Y1	3 – 8
1HX–12169–11	3 – 8
1HX–12169–31	3 – 8
1HX–12169–50	3 – 8
1HX–12169–70	3 – 8
1HX–12169–90	3 – 8
1HX–12169–E0	3 – 8
1HX–12169–G0	3 – 8
1HX–12169–J0	3 – 8
1HX–12169–L0	3 – 8
1HX–12169–N0	3 – 8
1HX–12169–T0	3 – 8
2MS–12210–00	4 – 6
5P0–12411–00	6 – 1
5NL–12564–00	1 – 28
8GL–13571–00	8 – 13
5JW–14104–00	8 – 15
8A7–14139–00	8 – 17
5PS–14147–00	8 – 8
895–14169–00	8 – 16
1WS–14335–00	8 – 10
8HG–14534–00	8 – 14

CODIGO Nº PART NO.	REF. Nº
4XY–14568–00	23 – 58
5VY–1482K–00	1 – 20
2H7–15361–00	5 – 18
1WD–16382–00	13 – 19
1WD–17424–00	14 – 28
278–17425–00	14 – 12
	14 – 29
26P–21568–10	23 – 60
1WD–22141–00	20 – 2
1WS–2331G–00	22 – 40
3FV–23462–00	22 – 38
1WD–25181–00	25 – 9
1WD–25381–00	27 – 19
5MT–25398–00	25 – 7
	27 – 18
5MT–25398–10	25 – 7
	27 – 18
5MT–25398–20	25 – 7
	27 – 18
1WD–25802–00	26 – 4
1WD–25802–50	28 – 4
1WD–25803–00	26 – 5
1WD–25803–50	28 – 5
1WD–25805–00	26 – 12
1WD–25806–00	28 – 15
5RB–25854–00	30 – 3
36Y–2589H–00	30 – 5
5KN–25926–01	28 – 17
34X–25937–00	28 – 7
4SS–27218–00	32 – 3
3KW–27234–00	32 – 8
4BP–27261–00	31 – 25
3WP–81980–00	42 – 13
4WA–81980–00	42 – 12
1WS–82504–00	43 – 12
1KB–83311–00	37 – 2
	37 – 6
	37 – 11
	37 – 15
3D7–83318–10	37 – 9
1KB–8333A–00	37 – 4
	37 – 17
1KB–8334A–00	37 – 8
	37 – 13
31A–83913–00	41 – 13
31A–83945–00	41 – 12
1HP–83980–01	30 – 11
4B4–84334–00	43 – 22

CODIGO Nº PART NO.	REF. Nº
4AG–85111–00	18 – 11
1WS–85801–00	8 – 9
1WS–85801–00	1 – 1
1WD–E111G–00	1 – 16
	1 – 25
1WD–E1133–10	1 – 3
2MS–E1133–10	1 – 2
2MS–E1181–00	1 – 13
1WD–E1191–00	1 – 17
1WD–E1193–00	1 – 19
4YS–E1198–00	7 – 15
2MS–E1311–00	1 – 26
1WD–E1351–00	1 – 27
1WD–E1454–00	2 – 22
1WD–E1496–00	2 – 18
1WD–E1531–00	2 – 15
1WD–E1536–00	2 – 6
1WD–E1549–00	2 – 7
2MS–E1603–00	2 – 12
2MS–E1631–00	2 – 11
1WD–E1633–00	2 – 13
2MS–E2111–00	3 – 1
2MS–E2113–00	3 – 4
2MS–E2117–00	3 – 5
3S0–E2118–00	3 – 6
1PA–E2119–00	3 – 7
2MS–E2121–00	3 – 2
2MS–E2126–00	3 – 3
2MS–E2170–01	4 – 1
1WD–E2176–00	4 – 3
2MS–E2180–01	4 – 2
1WD–E2213–00	4 – 9
33S–E2223–00	5 – 8
1WD–E2241–00	1 – 18
1WD–E2251–00	4 – 11
2MS–E2252–00	4 – 12
1WD–E2256–00	4 – 14
2MS–E2405–00	6 – 9
1WD–E2413–00	6 – 2
1WD–E2420–00	5 – 1
1WD–E2422–00	5 – 14
1WD–E2428–00	5 – 15
1WD–E2450–00	5 – 6
1WD–E2453–00	5 – 7
33S–E2456–00	5 – 9
1WD–E2461–00	6 – 8
5ST–E2462–00	6 – 12
2MS–E2577–00	6 – 4

CODIGO Nº PART NO.	REF. Nº
1WD–E2578–00	6 – 5
1WD–E2671–00	6 – 10
5YP–E2675–00	6 – 11
1WD–E2681–00	5 – 12
1WD–E319L–00	5 – 10
1WD–E3300–00	7 – 1
1WD–E3341–00	7 – 3
1WD–E3342–00	7 – 4
1WD–E3410–00	7 – 9
1WD–E3414–00	7 – 16
1WD–E3415–00	7 – 10
1WD–E3417–00	7 – 13
1WD–E3440–00	7 – 11
54P–E3474–00	8 – 35
1WD–E3543–01	8 – 37
1WD–E3556–00	8 – 6
1WD–E3573–00	8 – 12
2MS–E3586–00	8 – 1
2MS–E3750–10	8 – 5
1WD–E3761–00	8 – 7
1WD–E3907–00	23 – 44
1WD–E3938–00	8 – 20
1WD–E3971–00	23 – 49
54P–E416A–00	8 – 18
1WD–E4243–00	8 – 19
1WD–E4411–00	8 – 21
2MS–E4412–00	8 – 25
1WD–E4422–00	8 – 29
1WD–E4437–00	8 – 24
52B–E443E–00	8 – 33
40D–E443G–00	27 – 28
1WD–E4451–00	8 – 32
1WD–E4452–00	8 – 26
1WD–E4457–00	8 – 27
1WD–E4462–00	8 – 30
2MS–E4469–00	8 – 22
2MS–E446C–00	8 – 23
2MS–E4602–00	9 – 1
1WD–E4613–00	9 – 21
1WD–E4628–00	9 – 27
2MS–E4710–00	9 – 6
54D–E4714–00	9 – 15
1WD–E4715–00	9 – 16
1WD–E4728–00	9 – 10
1WD–E473L–00	9 – 2
5TP–E4747–00	9 – 4
	17 – 30
	31 – 48

CODIGO Nº PART NO.	REF. Nº
1WD–E4758–00	9 – 7
1WD–E4763–00	9 – 14
1WD–E4775–00	9 – 5
1WD–E4840–00	1 – 31
1WD–E4881–00	1 – 32
1WD–E4882–01	1 – 34
1WD–E4890–00	1 – 21
1WD–E4899–00	1 – 22
1WD–E5148–00	10 – 4
1WD–E5150–10	10 – 1
1WD–E5155–00	10 – 12
2MS–E5317–00	43 – 10
1WD–E5362–00	5 – 19
1WD–E5373–01	8 – 40
1WD–E5377–00	11 – 21
1WD–E5411–00	11 – 1
1WD–E5413–10	11 – 16
1WD–E5418–00	11 – 22
1WD–E5421–00	5 – 2
2MS–E5441–00	11 – 14
1WD–E5451–00	11 – 7
1WD–E5461–00	11 – 10
1WD–E5462–00	11 – 17
1WD–E5514–00	12 – 1
1WD–E5515–00	12 – 3
44D–E5521–00	12 – 2
1WD–E5580–00	12 – 4
1WD–E6111–00	13 – 1
2MS–E6150–00	13 – 2
1WD–E6154–00	13 – 3
1WD–E6181–00	13 – 13
1WD–E6324–00	13 – 6
1WD–E6331–00	13 – 5
2MS–E6333–10	13 – 8
1WD–E6337–00	13 – 9
2MS–E6340–00	13 – 15
2MS–E6350–00	13 – 7
1WD–E6356–00	13 – 14
2MS–E6371–00	13 – 4
2MS–E7121–00	14 – 7
2MS–E7131–00	14 – 5
2MS–E7151–00	14 – 2
2MS–E7161–00	14 – 6
2MS–E7211–00	14 – 23
2MS–E7221–00	14 – 14
2MS–E7231–00	14 – 18
2MS–E7241–00	14 – 19
2MS–E7251–00	14 – 22

CODIGO Nº PART NO.	REF. Nº
2MS–E7261–00	14 – 17
1WD–E7402–00	14 – 13
2MS–E7411–00	14 – 1
1WD–E7460–00	14 – 31
1WD–E8101–00	16 – 4
1WD–E8110–00	16 – 11
1WD–E8111–00	16 – 12
1WD–E8112–00	16 – 17
1EG–E8113–01	16 – 13
1WD–E8115–00	16 – 14
1WD–E8127–00	16 – 2
1WD–E8140–00	16 – 8
1WD–E8175–00	16 – 3
1WD–E8337–00	16 – 1
1WD–E8511–00	15 – 4
1WD–E8512–00	15 – 5
1WD–E8513–00	15 – 6
1WD–E8531–00	15 – 7
1WD–E8536–00	15 – 9
1WD–E8540–10	15 – 1
5TP–E8542–00	15 – 2
1WD–E8562–00	15 – 10
1WD–F1110–11	17 – 1
1WD–F112C–00	17 – 3
1WD–F113B–00	17 – 2
1WD–F113J–00	18 – 10
1WD–F1171–00	17 – 17
1WD–F117G–00	17 – 4
1WD–F117K–00	24 – 12
1WD–F122A–00	17 – 24
1WD–F122B–00	17 – 25
1WD–F1278–00	33 – 19
1WD–F135F–00	17 – 15
1WD–F144G–00	31 – 28
1WD–F153E–20	18 – 2
1WD–F153E–30	18 – 2
1WD–F1586–00	18 – 3
1WD–F1611–01	18 – 13
1WD–F1617–00	18 – 21
1WD–F1621–00	18 – 31
1WD–F1629–01	18 – 20
1WD–F163A–00	18 – 33
1WD–F163E–00	18 – 18
1WD–F1652–00	17 – 5
2MS–F1668–00	20 – 17
1WD–F1669–00	18 – 14
1WD–F1688–00	18 – 26
1WD–F1689–00	18 – 27

INDICE NUMERICO
NUMERICAL INDEX

CODIGO Nº PART NO.	REF. Nº
1WD–F16A2–00	18 – 17
1WD–F171E–00	19 – 38
1WD–F171L–00	19 – 19
1WD–F171M–00	19 – 22
1WD–F171N–00	19 – 25
1WD–F171X–00	19 – 40
1WD–F172W–00	19 – 34
1WD–F1731–00–P0	19 – 36
1WD–F1731–00–P1	19 – 36
1WD–F1731–00–P5	19 – 36
1WD–F1732–00	40 – 7
1WD–F179E–00	42 – 28
1WD–F17F1–60	19 – 2
1WD–F17F1–70	19 – 2
1WD–F17F1–80	19 – 2
1WD–F17F2–60	19 – 11
1WD–F17F2–70	19 – 11
1WD–F17F2–80	19 – 11
1WD–F1816–00	19 – 31
1WD–F1817–00	19 – 32
3C1–F1828–00	19 – 30
1WD–F1871–00	19 – 27
1WD–F1875–00	19 – 29
1WD–F191B–00	17 – 9
1WD–F193A–00	17 – 6
1WD–F2110–00	20 – 1
1WD–F2123–00	17 – 8
1WD–F2129–00	20 – 3
1WD–F2151–00	20 – 7
1WD–F2174–00	27 – 25
1WD–F2184–00	20 – 4
1WD–F2210–00	20 – 14
1WD–F2311–00	20 – 11
1WD–F248B–00	20 – 9
1WD–F3100–00	22 – 1
1WD–F3102–00	22 – 2
1WD–F3103–00	22 – 19
1WD–F3110–00	22 – 4
	22 – 21
45P–F3111–00	22 – 17
	22 – 34
1WD–F3118–00	22 – 16
	22 – 33
45P–F3125–00	22 – 7
	22 – 24
1WD–F3126–00	22 – 3
1WD–F3136–00	22 – 20
1WD–F3141–00	22 – 6

CODIGO Nº PART NO.	REF. Nº
1WD–F3141–00	22 – 23
45P–F3144–00	22 – 11
	22 – 28
45P–F3145–00	22 – 9
	22 – 26
45P–F3146–00	22 – 8
	22 – 25
45P–F3149–00	22 – 15
	22 – 32
45P–F3156–00	22 – 10
	22 – 27
509–F3158–L0	22 – 13
	22 – 30
1WD–F3170–00	22 – 5
	22 – 22
1WD–F3173–00	22 – 12
	22 – 29
31B–F3181–00	22 – 14
	22 – 31
45P–F3188–00	22 – 18
	22 – 35
1WD–F3340–00	22 – 36
45P–F3346–00	22 – 39
5BP–F3416–10	21 – 2
5BP–F3418–00	21 – 5
1WD–F3435–00	21 – 6
1WD–F4110–00	23 – 1
1WD–F4129–00–P1	23 – 29
1WD–F4129–00–P3	23 – 29
1WD–F4129–00–P4	23 – 29
1WD–F412Y–00	23 – 6
1WD–F4139–00–P1	23 – 36
1WD–F4139–00–P3	23 – 36
1WD–F4139–00–P4	23 – 36
1WD–F413B–00	23 – 59
1WD–F414E–00	23 – 43
1WD–F414G–00	23 – 28
5D9–F414G–00	17 – 7
	23 – 4
45P–F414H–00	23 – 5
1WD–F4188–00	23 – 2
1WD–F4191–00	23 – 12
1WD–F41B1–00–P1	23 – 22
1WD–F41B1–00–P3	23 – 22
1WD–F4312–00	23 – 50
1WD–F4313–01	23 – 55
1WD–F4314–00	23 – 51
1WD–F4315–00	23 – 56

CODIGO Nº PART NO.	REF. Nº
1WD–F4339–00	23 – 7
1WD–F4376–00	23 – 53
1WD–F4376–00	23 – 47
1WD–F4491–00	23 – 46
1WD–F4710–01	24 – 1
1WD–F4711–00	24 – 2
3C1–F4741–00	24 – 6
5BP–F4741–00	24 – 3
1WD–F4750–00	24 – 5
1WD–F4780–00	24 – 7
1WD–F478E–00	24 – 10
1WD–F4792–00	24 – 8
1WD–F510C–00	25 – 2
1WD–F5168–01–0X	25 – 1
1WD–F5168–01–P0	25 – 1
1WD–F5338–01–0X	27 – 1
1WD–F5338–01–P0	27 – 1
1WD–F5364–00	27 – 5
1WD–F5366–00–98	27 – 6
1WD–F5366–00–P0	27 – 6
1WD–F5377–00	27 – 9
1WD–F537W–00	27 – 11
1WD–F537X–00	27 – 12
1WD–F5383–00	27 – 21
1PA–F5386–00	25 – 8
1WD–F5386–00	27 – 20
1WD–F5388–00	27 – 24
1WD–F539F–00	27 – 13
1WD–F5443–00	27 – 10
1WD–F5807–00	30 – 2
1WD–F5808–00	32 – 2
1WD–F580E–00	32 – 1
1WD–F580U–01	26 – 3
1WD–F580W–01	28 – 3
1WD–F581U–00	26 – 1
50C–F582A–50	32 – 5
B04–F582E–00	32 – 21
1WD–F582W–00	28 – 1
5TL–F5838–00	28 – 18
1WD–F5852–00	30 – 4
1WD–F5852–50	32 – 12
2VN–F5854–00	32 – 10
3C1–F5855–00	30 – 7
50C–F5855–00	32 – 11
50C–F5866–00	32 – 6
3RW–F5867–00	30 – 6
1WD–F5870–00	30 – 1
1WD–F5872–00	30 – 15

CODIGO Nº PART NO.	REF. Nº
1WD–F5873–00	32 – 22
1WD–F5875–00	30 – 18
1WD–F5876–00	30 – 20
1WD–F5887–00	32 – 25
50C–F5894–10	32 – 9
1WD–F5895–50	32 – 13
50C–F589A–00	32 – 15
1WD–F5914–50	28 – 16
5YP–F5917–00	26 – 8
	28 – 6
1WD–F5919–00	26 – 10
1WD–F5919–50	28 – 9
1WD–F5921–51	28 – 12
5YP–F5924–00	26 – 11
1WD–F5924–50	28 – 10
5YP–F5925–01	26 – 9
	28 – 11
5YP–F5937–00	26 – 7
1WD–F5939–51	28 – 13
1WD–F5939–61	28 – 14
1WD–F6121–01	29 – 1
1WD–F6122–00	29 – 5
1WD–F6131–00	29 – 17
1WD–F6132–00	29 – 22
1S7–F622F–00	29 – 12
2MS–F622H–00	29 – 11
1WD–F6240–00	29 – 10
2DP–F6241–00	29 – 9
1WD–F6246–00	29 – 14
1S7–F6257–00	29 – 13
1WD–F6280–10	33 – 23
1WD–F6290–10	33 – 24
1WD–F6301–00	29 – 19
1WD–F6335–00	29 – 16
1WD–F7211–00	31 – 24
50C–F7222–00	32 – 4
45P–F7261–00	16 – 18
1WD–F7311–00	31 – 1
1WD–F7321–10	31 – 2
1WD–F7430–00	31 – 32
1WD–F7431–00	31 – 33
1WD–F7435–00	31 – 11
	31 – 20
1WD–F7437–00	31 – 36
	31 – 44
1WD–F7440–00	31 – 40
1WD–F7441–00	31 – 41
1WD–F7442–00	31 – 9

CODIGO Nº PART NO.	REF. Nº
1WD–F7443–00	31 – 18
2MS–F7445–00	31 – 15
2MS–F7446–00	31 – 31
1WD–F7451–00	31 – 10
1WD–F7461–00	31 – 19
1WD–F8100–00	24 – 15
31B–F8307–00	19 – 3
	19 – 12
1WD–F8328–30	34 – 54
1WD–F8328–40	34 – 54
1WD–F833E–00	34 – 46
1WD–F8356–00	33 – 21
1WD–F835G–00	33 – 4
1WD–F835U–00–P0	34 – 29
1WD–F835U–00–P1	34 – 29
1WD–F835V–00–P0	34 – 30
1WD–F835V–00–P1	34 – 30
1PA–F836B–00	19 – 42
	33 – 31
1WD–F836K–00	34 – 48
1WD–F836L–00	34 – 49
1WD–F836M–00	34 – 52
1WD–F836N–00	33 – 15
1WD–F836R–00	33 – 16
1WD–F8376–00	33 – 5
	33 – 14
	33 – 20
44D–F8379–00	33 – 12
1WD–F8381–00	33 – 1
1WD–F8385–00–P0	34 – 34
1WD–F8385–00–P2	34 – 34
1WD–F8391–60	33 – 9
2MS–F8391–70	33 – 9
1WD–F8391–80	33 – 9
1WD–F8392–60	33 – 10
1WD–F8392–70	33 – 10
2MS–F8392–80	33 – 10
2MS–F8393–60	34 – 2
2MS–F8393–70	34 – 2
2MS–F8393–80	34 – 2
2MS–F8394–60	34 – 8
2MS–F8394–70	34 – 8
2MS–F8394–80	34 – 8
1WD–F8395–00–P0	34 – 40
1WD–F8395–00–P2	34 – 40
2MS–F8398–60	34 – 3
1WD–F8398–70	34 – 3
1WD–F8399–60	34 – 9

CODIGO Nº PART NO.	REF. Nº
1WD–F8399–70	34 – 9
1WD–F83GA–70	34 – 4
1WD–F83GB–70	34 – 10
1WD–F8483–00	33 – 25
1WD–F8484–00	33 – 26
1WD–F8485–00	33 – 27
1WD–H1315–00	43 – 13
1WD–H1410–01	35 – 2
1WD–H1450–00	35 – 1
1WD–H1800–00	36 – 1
1WD–H1801–00	36 – 2
1WD–H1828–00	36 – 4
4FP–H182L–00	36 – 6
1WD–H183G–00	36 – 5
1WD–H1861–00	36 – 3
1WD–H1940–00	42 – 15
1WD–H1950–00	42 – 14
1WD–H1960–00	43 – 16
1WD–H1961–00	43 – 14
1WD–H2100–00	42 – 6
1WD–H2115–00	42 – 18
1WD–H2116–01	42 – 19
1WD–H2121–00	42 – 7
1WD–H2131–00	42 – 8
5TL–H2131–00	24 – 16
1WD–H2133–00	41 – 2
45P–H2133–00	41 – 5
1WD–H2151–00	42 – 16
1WD–H2151–10	42 – 11
1WD–H2151–20	42 – 10
1WD–H2310–00	42 – 1
B04–H2314–00	42 – 2
B04–H2314–10	42 – 3
1WD–H2370–00	42 – 5
1WD–H2501–01	42 – 25
1WD–H2530–10	43 – 18
1WD–H2540–00	43 – 3
1WD–H2576–00	43 – 19
1WD–H2590–01	42 – 9
1WD–H2591–00	42 – 29
1WD–H2910–00	41 – 9
1WD–H2911–00	41 – 10
5BP–H2917–00	41 – 16
1WD–H3310–10	37 – 1
1WD–H3318–00	37 – 18
1WD–H3320–10	37 – 5
1WD–H3330–10	37 – 10
3D9–H3333–10	37 – 3

INDICE NUMERICO
NUMERICAL INDEX

CODIGO Nº PART NO.	REF. Nº
3D9–H3333–10	37 – 7
	37 – 12
	37 – 16
1WD–H3340–10	37 – 14
1WD–H3351–00	43 – 23
1WD–H3371–00	43 – 24
1WD–H3378–00	43 – 26
2MS–H3500–10	38 – 1
1WD–H3519–00	38 – 5
1WD–H3559–00	33 – 3
1WD–H3571–00	38 – 2
1WD–H3572–00	38 – 3
54P–H3591–00	43 – 6
1WD–H3755–00	43 – 9
1WD–H3912–00	41 – 11
1WD–H3922–00	30 – 8
1WD–H395W–00	41 – 3
45P–H395W–00	41 – 6
1WD–H3972–00	41 – 1
1WD–H3975–00	41 – 4
1WD–H4300–00	39 – 1
1WD–H4303–00	39 – 3
1WD–H4314–00	39 – 2
1WD–H4340–00	39 – 5
1WD–H4347–00	39 – 6
1WD–H4397–00	39 – 4
1WD–H4547–00	40 – 10
1WD–H4710–01	40 – 1
1WD–H4726–00	40 – 11
1WD–H4740–00	40 – 8
1WD–H4744–00	40 – 9
1WD–H4753–00	40 – 12
3C1–H5130–00	43 – 28
1WD–H5546–00	43 – 2
1WD–H5752–00	23 – 45
2MS–H591A–01	43 – 1
1WD–H592A–00	43 – 8
4C9–W0048–00	26 – 6
5YP–W0048–50	28 – 8
1WD–WF461–00	23 – 18
1WD–WF479–00	24 – 11
1WD–XF11W–00–P2	34 – 15
1WD–XF11W–10–P0	34 – 15
1WD–XF11W–40–P0	34 – 15
1WD–XF11X–00–P2	34 – 20
1WD–XF11X–10–P0	34 – 20
1WD–XF11X–40–P0	34 – 20
1WD–XF151–00–P6	18 – 1

CODIGO Nº PART NO.	REF. Nº
1WD–XF151–20–P2	18 – 1
1WD–XF151–70–P1	18 – 1
1WD–XF171–00–P4	19 – 1
1WD–XF171–40–P2	19 – 1
1WD–XF171–60–P1	19 – 1
1WD–XF172–00–P4	19 – 10
1WD–XF172–40–P2	19 – 10
1WD–XF172–60–P1	19 – 10
1WD–XF83F–10–P4	33 – 8
1WD–XF83F–20–P3	33 – 8
1WD–XF83F–60–P1	33 – 8
1WD–XF83L–10–P4	34 – 1
1WD–XF83L–70–P1	34 – 1
1WD–XF83L–90–P2	34 – 1
1WD–XF83M–10–P4	34 – 7
1WD–XF83M–80–P1	34 – 7
1WD–XF83M–90–P2	34 – 7
1WD–XH250–01	42 – 27
90105–06027	1 – 4
90105–07800	4 – 4
90105–088F7	10 – 6
90105–088F8	2 – 16
90105–088G0	10 – 7
90105–088G7	9 – 23
90105–106A7	31 – 5
90105–10883	2 – 8
	35 – 4
90105–10889	17 – 12
90105–10891	17 – 13
90105–12093	20 – 15
90105–12309	20 – 8
90105–14102	21 – 7
90109–05003	18 – 32
90109–060G4	42 – 26
90109–063F1	18 – 15
90109–06577	30 – 10
90109–06898	1 – 15
90109–06899	1 – 24
90109–085G6	31 – 17
	31 – 30
90110–05806	23 – 19
90110–06161	4 – 13
	4 – 15
	12 – 5
90110–06182	15 – 11
90110–06870	1 – 11
90110–08071	31 – 39
	31 – 47

CODIGO Nº PART NO.	REF. Nº
90111–05003	19 – 35
	19 – 39
	19 – 41
	33 – 18
	34 – 35
	34 – 41
90111–05018	18 – 25
90111–05021	18 – 22
90111–06013	31 – 16
90111–06117	23 – 25
	34 – 39
	34 – 45
	40 – 2
90111–06119	20 – 13
90111–06121	32 – 20
90111–06137	18 – 8
90111–06152	9 – 30
90111–06802	9 – 8
90111–06847	9 – 13
90111–08815	26 – 2
	28 – 2
90116–10065	27 – 14
90119–05020	23 – 32
	23 – 39
90119–06810	19 – 9
	19 – 18
	34 – 25
90123–08083	41 – 18
90149–10804	26 – 13
90150–05023	33 – 13
90151–03005	41 – 17
90159–06054	24 – 13
90160–04009	43 – 20
90160–05810	19 – 37
90170–06023	16 – 15
90170–18221	13 – 11
90179–05849	33 – 2
90179–07652	2 – 4
90179–08316	41 – 19
90179–10805	17 – 14
90179–20013	14 – 33
90179–25615	21 – 3
90183–05076	18 – 16
90183–050A7	18 – 23
	19 – 4
	19 – 13
	33 – 7
	34 – 5

CODIGO Nº PART NO.	REF. Nº
90183–050A7	34 – 11
	34 – 16
	34 – 21
90183–05807	19 – 5
	19 – 14
	23 – 27
	23 – 33
	23 – 40
	33 – 11
	34 – 6
	34 – 12
	34 – 32
	40 – 5
90183–06011	9 – 20
90183–06815	34 – 33
90183–06818	9 – 9
	17 – 21
90201–04028	43 – 21
90201–04804	40 – 14
90201–05036	39 – 8
90201–05043	43 – 30
90201–05827	38 – 8
90201–06072	6 – 14
90201–06088	9 – 19
90201–06380	23 – 9
	23 – 15
	34 – 28
90201–08083	32 – 17
90201–08612	9 – 24
90201–087F0	9 – 26
90201–10021	16 – 20
	31 – 26
90201–10118	30 – 17
	32 – 24
90201–10119	7 – 6
90201–102R1	2 – 9
	35 – 5
90201–10843	13 – 16
90201–10845	1 – 10
90201–127E1	16 – 7
90201–16812	2 – 19
90201–17809	27 – 23
90201–20023	14 – 32
90201–20276	14 – 25
90201–22013	13 – 12
90202–05180	34 – 36
	34 – 42
90202–26142	21 – 4

CODIGO Nº PART NO.	REF. Nº
90206–14001	16 – 19
90209–25011	14 – 15
90214–22008	14 – 3
	14 – 20
90215–18800	13 – 10
90240–08124	32 – 16
90240–08145	31 – 13
	31 – 22
	31 – 37
	31 – 45
90269–06081	18 – 19
	18 – 34
	19 – 8
	19 – 17
	19 – 21
	19 – 24
	33 – 17
	34 – 13
	34 – 51
90280–05013	35 – 6
90282–04036	2 – 17
90338–05010	29 – 4
	29 – 8
	33 – 30
90338–09012	30 – 14
	41 – 21
90338–16262	10 – 2
90338–23801	17 – 16
90340–12808	7 – 14
90340–18002	1 – 5
90340–32819	11 – 5
90387–05042	40 – 16
90387–06242	20 – 12
90387–06299	23 – 8
	23 – 14
90387–064W3	6 – 15
90387–066J9	18 – 28
90387–067V1	40 – 3
90387–06857	19 – 28
90387–06899	19 – 6
	19 – 15
	23 – 24
	23 – 31
	23 – 38
	34 – 17
	34 – 22
	34 – 37
	34 – 43

CODIGO Nº PART NO.	REF. Nº
90387–068C2	33 – 29
90387–068C5	18 – 4
90387–068L0	18 – 5
90387–068L9	18 – 29
90387–068N4	9 – 18
90387–07819	17 – 19
90387–087L0	9 – 12
	9 – 29
90387–08813	17 – 29
	31 – 49
90387–10010	31 – 6
90387–17810	27 – 2
90387–20814	14 – 24
90401–10812	30 – 16
	32 – 23
90401–20008	7 – 12
90430–06014	4 – 8
	5 – 16
	10 – 11
90430–08119	1 – 7
90430–08143	11 – 4
90430–10804	43 – 7
90445–217G3	31 – 8
90450–28001	6 – 7
90450–55804	8 – 4
90462–08225	11 – 24
90462–08806	11 – 20
90462–08810	7 – 18
90462–08812	11 – 19
90464–12015	17 – 23
90464–13227	42 – 31
90464–14803	42 – 22
90464–16003	41 – 7
90464–16012	23 – 54
90464–22800	42 – 23
90464–26001	42 – 30
90464–30001	41 – 8
90464–30009	17 – 22
	32 – 27
90464–36800	42 – 20
90464–50800	42 – 24
90464–70800	42 – 21
90467–08003	19 – 33
90467–09006	23 – 57
90467–110A3	8 – 34
90467–12052	8 – 39
90467–12085	32 – 14
90467–13802	8 – 38

INDICE NUMERICO
NUMERICAL INDEX

CODIGO Nº PART NO.	REF. Nº
90467–13802	8 – 41
90467–15012	23 – 52
90467–16800	1 – 36
90467–16801	1 – 33
	1 – 35
90467–250A1	6 – 6
90480–01558	23 – 21
	34 – 14
	34 – 18
	34 – 23
90480–01559	23 – 35
	23 – 42
90480–10003	40 – 6
90480–11009	40 – 15
90480–12581	9 – 11
	9 – 28
90480–12808	19 – 7
	19 – 16
	23 – 23
	23 – 30
	23 – 37
	34 – 19
	34 – 24
	34 – 38
	34 – 44
90480–12815	18 – 6
90480–13001	40 – 4
90480–13398	17 – 18
90480–14004	38 – 6
	39 – 7
90480–15807	23 – 13
90480–15808	6 – 16
90480–15809	18 – 7
90501–06022	15 – 3
90501–080A2	15 – 8
90501–12743	31 – 34
	31 – 42
90501–22800	2 – 20
90506–23812	31 – 4
90506–26807	31 – 27
90508–18136	13 – 18
90508–183B9	31 – 12
	31 – 21
90508–29806	16 – 5
90520–03823	23 – 3
91312–05008	42 – 17
91312–05010	23 – 20
	23 – 48

CODIGO Nº PART NO.	REF. Nº
91312–05010	29 – 21
91312–05012	11 – 2
91312–06010	5 – 13
91312–06016	8 – 3
	43 – 11
91312–06020	1 – 23
	4 – 10
91312–06025	11 – 15
91312–06030	7 – 8
	35 – 3
91317–06016	29 – 3
	29 – 7
91317–06020	29 – 15
91317–06025	33 – 28
91317–08020	29 – 2
	29 – 6
91317–08030	21 – 8
91317–10020	17 – 26
91317–10045	17 – 27
91317–10060	17 – 10
91401–20012	32 – 18
91401–25015	31 – 14
	31 – 23
	31 – 38
	31 – 46
92012–06012	29 – 18
	29 – 23
92012–08030	32 – 19
92014–08012	11 – 3
92902–08600	13 – 20
	27 – 26
92902–10200	17 – 11
92907–10600	17 – 28
93101–20802	14 – 11
	14 – 27
93102–12891	16 – 10
93102–15801	5 – 5
93102–35803	14 – 30
93106–23002	27 – 4
93106–26815	25 – 3
93106–38046	27 – 8
93210–068F7	10 – 13
93210–108H5	41 – 14
93210–12803	10 – 3
93210–15620	32 – 7
93210–16716	1 – 29
93210–21801	43 – 4
93210–27807	5 – 20

CODIGO Nº PART NO.	REF. Nº
93210–32816	11 – 6
93210–39802	8 – 2
93210–39802	27 – 3
93306–255Y9	14 – 8
93306–302X4	25 – 4
93306–30450	27 – 7
93311–420Y3	14 – 10
	14 – 26
93315–21570	5 – 4
93317–11096	5 – 3
93317–11295	16 – 9
93320–32403	20 – 5
93399–99932	22 – 37
93399–999Y3	21 – 1
93440–24200	14 – 4
	14 – 21
93440–28184	14 – 16
93440–52009	14 – 9
93450–16068	2 – 14
93501–04830	31 – 35
	31 – 43
93605–10090	2 – 21
93900–00828	25 – 6
	27 – 17
94568–H3112	27 – 29
94591–61118	4 – 5
94700–00872	1 – 12
95022–06008	4 – 7
95022–06010	38 – 9
95022–06012	24 – 4
	34 – 47
95022–06014	17 – 20
95022–06020	6 – 3
	42 – 4
95022–06025	5 – 17
	7 – 17
	11 – 9
	11 – 12
	11 – 18
	11 – 23
	36 – 7
95022–06050	11 – 13
95022–08012	1 – 6
95022–08014	23 – 17
95027–06010	9 – 3
95027–06025	30 – 13
95027–06045	18 – 9
95027–08035	9 – 17

CODIGO Nº PART NO.	REF. Nº
95302–06600	16 – 16
95302–08600	27 – 27
95602–05100	43 – 29
95602–06100	30 – 9
	41 – 15
95602–06200	18 – 30
95602–10200	27 – 15
	31 – 7
95602–12100	20 – 10
	20 – 16
95602–14200	20 – 6
	25 – 10
95602–16200	27 – 22
95607–08200	9 – 31
95612–08625	1 – 8
95702–06500	18 – 12
	30 – 19
	34 – 27
95707–06500	24 – 9
95707–08500	9 – 22
95802–06010	31 – 29
95802–06016	43 – 15
95802–06025	43 – 17
95802–08012	43 – 25
95807–06016	43 – 27
95812–06012	23 – 11
95812–06035	10 – 8
95812–06045	10 – 9
95812–06065	10 – 10
95812–08035	33 – 22
95817–08030	9 – 25
95817–10025	31 – 3
95822–06010	8 – 36
95822–06025	23 – 10
	23 – 16
95827–06014	32 – 26
95827–06025	6 – 13
97012–06020	16 – 21
97507–06525	41 – 20
97602–04212	30 – 12
97702–30016	38 – 4
97702–50016	24 – 14
	33 – 6
	38 – 7
97702–50025	8 – 28
97707–40020	40 – 13
97707–50012	23 – 26
	23 – 34

CODIGO Nº PART NO.	REF. Nº
97707–50012	23 – 41
97707–50016	18 – 24
	19 – 20
	19 – 23
	19 – 26
	34 – 26
	34 – 31
	34 – 50
	34 – 53
	39 – 9
98502–05016	43 – 5
98502–06012	8 – 11
98507–05012	29 – 20
98902–05020	8 – 31
99002–07600	13 – 21
99009–08400	5 – 11
99009–10400	7 – 5
	13 – 17
99009–12400	16 – 6
99009–15500	7 – 2
99530–08012	7 – 7
	11 – 8
	11 – 11
99530–10014	10 – 5
99530–14016	1 – 14
	1 – 30

CODIGO Nº PART NO.	REF. Nº